RBI BEARING

Bearings + Technology + Solutions

MOUNTED UNITS & INSERTS

www.rbibearing.com + 1-800-708-2128

MOUNTED UNIT FEATURES & ADVANTAGES

- Available with RBI's Armor Bearing Technology & Protection
- Cast iron, stainless steel, thermoplastic, ductile iron and pressed steel material
- Available in a variety of mounting configurations
- Standard grease fill (special grease fills available)
- Set screw or Eccentric locking collar options
- Factory sealed
- Easy to mount
- Accurate fitting of the housing

ARMOR BEARING SERIES | BEARING TECHNOLOGY & PROTECTION

RBI offers all of our bearing products with our Armor Bearing Technology & Protection to reduce bearing friction and substantially increase bearing life - which means less downtime and reduced repair costs. We offer Armor Nano Technology, Armor Long Lasting Lubrication Technology & Armor Coated Protection. Armor Technologies do not alter the dimensional tolerances of the bearings. Armor Bearing Technologies & Protection benefit applications experiencing high heat temperatures, harsh contamination and clean environments sensitive to corrosion and chemical wash downs.

ARMOR
BEARING SERIES

ARMOR Nano Technology
ARMOR Long Lasting Lubrication
ARMOR Coated Protection

- Significantly extend the bearing's life
- Shields the bearing against harsh environments
- Increases efficiency and production
- Provides constant and consistent lubrication
- Preventing contamination ingress & corrosion
- Dramatically reducing shutdowns & the need for maintenance
- Saves time and operation costs

CONTENTS

PILLOW BLOCK UNITS 04-11
FLANGE BLOCK UNITS 12-20
TAKE-UP UNITS 21-22
PRESSED STEEL UNITS 23-26
RUBBER CARTRIDGE UNITS 27
INSERT BEARINGS 28-32
ENGINEERING DATA 33-35

PILLOW BLOCK

SET SCREW TYPE: HIGH CENTER HEIGHT

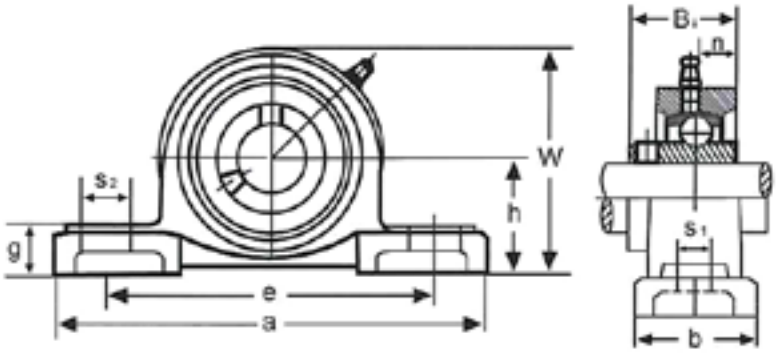

UCP200 Series

Shaft Dia. mm.	Shaft Dia. in.	RBI Unit No.	Dimensions (in.) h	a	e	b	s_2	s_1	g	w	Bi	n	Bolt Used (in.)	Bearing No.	Housing No.	Weight (lbs.)
12 15 17	1/2 5/8	UCP201-8 UCP202-10 UCP201 UCP202 UCP203	1-3/16	5	3-3/4	1-1/2	3/4	1/2	15/32	2-3/8	1.2205	0.7205	3/8	UC201-8 UC202-10 UC201 UC202 UC203	P204	1.72
20	3/4	UCP204-12 UCP204	1-5/16	5	3-3/4	1-1/2	3/4	1/2	1/2	2-17/32	1.2205	0.7205	3/8	UC204-12 UC204	P204	1.46
25	7/8 15/16 1	UCP205-14 UCP205-15 UCP205-16 UCP205	1-7/16	5-1/2	4-1/8	1-1/2	3/4	1/2	1/2	2-25/32	1.3386	0.563	3/8	UC205-14 UC205-15 UC205-16 UC205	P205	1.9
30	1-1/16 1-1/8 1-3/16 1-1/4	UCP206-17 UCP206-18 UCP206-19 UCP206-20 UCP206	1-11/16	6-1/2	4-3/4	1-7/8	13/16	21/32	19/32	3-5/16	1.5	0.626	1/2	UC206-17 UC206-18 UC206-19 UC206-20 UC206	P206	3.11
35	1-1/4 1-5/16 1-3/8 1-7/16	UCP207-20 UCP207-21 UCP207-22 UCP207-23 UCP207	1-7/8	6-9/16	5	1-7/8	13/16	21/32	5/8	3-21/32	1.689	0.689	1/2	UC207-20 UC207-21 UC207-22 UC207-23 UC207	P207	3.66
40	1-1/2 1-9/16	UCP208-24 UCP208-25 UCP208	1-15/16	7-1/4	5-13/32	2-1/8	13/16	21/32	21/32	3-27/32	1.937	0.746	1/2	UC208-24 UC208-25 UC208	P208	4.67
45	1-5/8 1-11/16 1-3/4	UCP209-26 UCP209-27 UCP209-28 UCP209	2-1/8	7-15/32	5-3/4	2-1/8	13/16	21/32	21/32	4-3/16	1.937	0.748	1/2	UC209-26 UC209-27 UC209-28 UC209	P209	5.29
50	1-7/8 1-15/16 2	UCP210-30 UCP210-31 UCP210-32 UCP210	2-1/4	8-1/8	6-1/4	2-3/8	7/8	25/32	3/4	4-7/16	2.0315	0.748	5/8	UC210-30 UC210-31 UC210-32 UC210	P210	6.48
55	2 2-1/8 2-3/16	UCP211-32 UCP211-34 UCP211-35 UCP211	2-1/2	8-5/8	6-23/32	2-3/8	7/8	25/32	3/4	4-29/32	2.189	0.874	5/8	UC211-32 UC211-34 UC211-35 UCP211	P211	8.07
60	2-1/4 2-3/8 2-7/16	UCP212-36 UCP212-38 UCP212-39 UCP212	2-3/4	9-1/2	7-1/4	2-3/4	1	25/32	7/8	5-7/16	2.563	1	5/8	UC212-36 UC212-38 UC212-39 UC212	P212	11.3
65	2-1/2	UCP213-40 UCP213	3	10-7/16	8	2-3/4	1-3/16	1	1	5-29/32	2.563	1	3/4	UC213-40 UC213	P213	13.4
70	2-3/4	UCP214-44 UCP214	3-1/8	10-15/32	8-9/32	2-27/32	1-3/16	1	1-3/32	6-5/32	2.937	1.189	3/4	UC214-44 UCP214	P214	15.2
75	2-15/16 3	UCP215-47 UCP215-48 UCP215	3-1/4	10-13/16	8-17/32	2-29/32	1-3/16	1	1-3/32	6-3/8	3.063	1.311	3/4	UC215-47 UC215-48 UC215	P215	17.3

Note: Grease fittings can be positioned on pillow blocks at 90° upon request.

CALL 1-800-708-2128 TO ORDER.

PILLOW BLOCK

SET SCREW TYPE: LOW CENTER HEIGHT

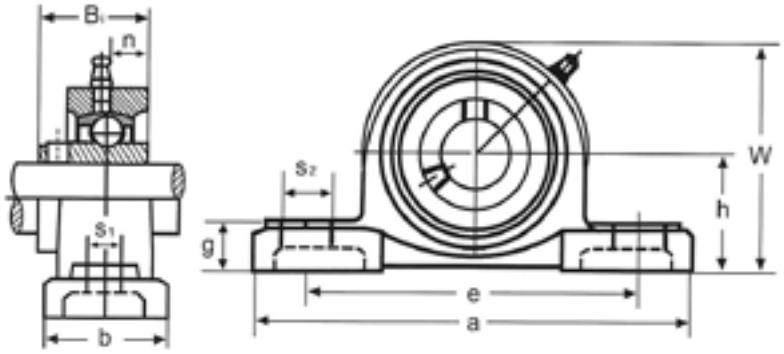

UCAK200 Series

Shaft Dia. mm.	Shaft Dia. in.	RBI Unit No.	Dimensions (in.) h	a	e	b	s_2	s_1	g	w	Bi	n	Bolt Used (in.)	Bearing No.	Housing No.	Weight (lbs.)
12 15 17 20	1/2 5/8 3/4	UCAK201-8 UCAK202-10 UCAK204-12 UCAK201 UCAK202 UCAK203 UCAK204	1-1/4	5-1/4	3-7/8	1-5/8	9/16	7/16	9/16	2-1/2	1.2205	0.7205	3/8	UC201-8 UC202-10 UC204-12 UC201 UC202 UC203 UC204	AK204	1.87
25	7/8 15/16 1	UCAK205-14 UCAK205-15 UCAK205-16 UCAK205	1-5/16	5-1/2	4-1/8	1-3/4	9/16	7/16	5/8	2-11/16	1.3386	0.563	3/8	UC205-14 UC205-15 UC205-16 UC205	AK205	2.20
30	1-1/16 1-1/8 1-3/16 1-1/4	UCAK206-17 UCAK206-18 UCAK206-19 UCAK206-20 UCAK206	1-9/16	6-5/16	4-3/4	1-7/8	3/4	9/16	11/16	3-5/32	1.500	0.626	7/16	UC206-17 UC206-18 UC206-19 UC206-20 UC206	AK206	3.09
35	1-1/4 1-5/16 1-3/8 1-7/16	UCAK207-20 UCAK207-21 UCAK207-22 UCAK207-23 UCAK207	1-13/16	6-9/16	5	1-7/8	3/4	9/16	3/4	3-5/8	1.689	0.689	7/16	UC207-20 UC207-21 UC207-22 UC207-23 UC207	AK207	3.90
40	1-1/2 1-9/16	UCAK208-24 UCAK208-25 UCAK208	1-15/16	7-1/8	5-1/2	2-1/8	3/4	9/16	3/4	3-15/16	1.937	0.748	7/16	UC208-24 UC208-25 UC208	AK208	4.65
45	1-5/8 1-11/16 1-3/4	UCAK209-26 UCAK209-27 UCAK209-28 UCAK209	2-1/16	7-1/2	5-3/4	2-1/8	3/4	9/16	13/16	4-13/16	1.937	0.748	7/16	UC209-26 UC209-27 UC209-28 UC209	AK209	5.47
50	1-7/8 1-15/16	UCAK210-30 UCAK210-31 UCAK210-32 UCAK210	2-3/16	8	6-1/4	2-1/4	3/4	9/16	7/8	4-7/16	2.0315	0.748	7/16	UC210-30 UC210-31 UC210-32 UC210	AK210	6.46
55	2 2-1/8 2-3/16	UCAK211-32 UCAK211-34 UCAK211-35 UCAK211	2-7/16	9-1/8	7-1/8	2-3/8	15/16	11/16	1	4-29/32	2.189	0.874	5/8	UC211-32 UC211-34 UC211-35 UC211	AK211	8.75
60	2-1/4 2-3/8 2-7/16	UCAK212-36 UCAK212-38 UCAK212-39 UCAK212	2-11/16	9-1/2	7-1/2	2-1/2	15/16	11/16	1-1/8	5-3/8	2.563	1.000	5/8	UC212-36 UC212-38 UC212-39 UC212	AK212	11.00
65	2-1/2	UCAK213-40 UCAK213	2-11/16	9-49/64	7-41/64	2-3/4	1-9/64	7/8	1-1/16	5-9/16	3.370	1.340	3/4	UC213-40 UC213	AK213	10.05
70	2-3/4	UCAK214-44 UCAK214	3-1/4	11-37/64	9-9/64	2-53/64	1-1/4	7/8	1-9/64	6-19/64	3.370	1.340	3/4	UC214-44 UC214	AK214	15.20
75	2-15/16 3	UCAK215-47 UCAK215-48 UCAK215	3-5/16	12	9-1/2	2-29/32	1-1/4	7/8	1-1/2	6-17/32	3.063	1.311	3/4	UC215-47 UC215-48 UC215	AK215	18.70

PILLOW BLOCK

SET SCREW TYPE: TAP BASE

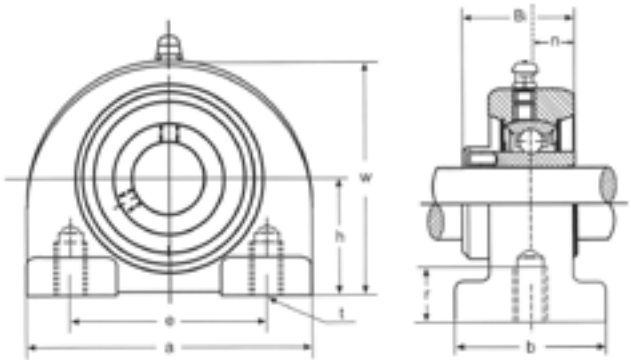

UCTB200 Series

Shaft Dia. (in.)	RBI Unit No.	Dimensions (in.)								Bolt Used (in.)	Bearing No.	Housing No.	Weight (lbs.)
		h	a	e	b	r	w	Bi	n				
1/2 5/8 3/4	UCTB201-8 UCTB202-10 UCTB204-12	1-5/16	2-7/8	2	1-1/2	1/2	2-9/16	1.220	0.500	3/8-16	UC201-8 UC202-10 UC204-12	TB204	1.43
7/8 15/16 1	UCTB205-14 UCTB205-15 UCTB205-16	1-7/16	3	2	1-1/2	1/2	2-13/16	1.339	0.563	3/8-16	UC205-14 UC205-15 UC205-16	TB205	1.79
1-1/16 1-1/8 1-3/16 1-1/4	UCTB206-17 UCTB206-18 UCTB206-19 UCTB206-20	1-11/16	4	3	1-1/2	5/8	3-3/8	1.500	0.626	7/16-14	UC206-17 UC206-18 UC206-19 UC206-20	TB206	2.65
1-1/4 1-5/16 1-3/8 1-7/16	UCTB207-20 UCTB207-21 UCTB207-22 UCTB207-23	1-7/8	4-1/4	3-1/4	1-7/8	3/4	3-3/4	1.689	0.689	1/2-13	UC207-20 UC207-21 UC207-22 UC207-23	TB207	3.75
1-1/2	UCTB208-24	1-15/16	4-5/8	3-1/2	1-7/8	3/4	3-15/16	1.937	0.748	1/2-13	UC208-24	TB208	4.19
1-5/8 1-11/16 1-3/4	UCTB209-26 UCTB209-27 UCTB209-28	2-1/8	5	3-3/4	2	3/4	4-1/4	1.937	0.748	1/2-13	UC209-26 UC209-27 UC209-28	TB209	4.85
1-7/8 1-15/16 2	UCTB210-30 UCTB210-31 UCTB210-32	2-1/4	5-1/2	4	2	7/8	4-5/8	2.031	0.748	5/8-11	UC210-30 UC210-31 UC210-32	TB210	5.73

CALL 1-800-708-2128 TO ORDER.

PILLOW BLOCK

ECCENTRIC LOCKING COLLAR TYPE: HIGH CENTER HEIGHT

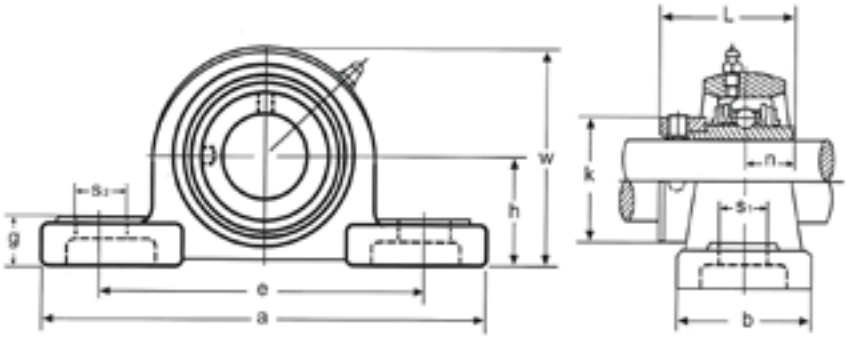

HCP200 Series

Shaft Dia.		RBI Unit No.	Dimensions (in.)											Bolt Used (in.)	Bearing No.	Housing No.	Weight (lbs.)
mm.	in.		h	a	e	b	s_2	s_1	g	w	L	n	K				
20	3/4	HCP204-12 HCP204	1-5/16	5	3-3/4	1-1/2	3/4	1/2	1/2	2-17/32	1.720	0.673	1-1/4	3/8	HC204-12 HC204	P204	1.54
25	7/8 15/16 1	HCP205-14 HCP205-15 HCP205-16 HCP205	1-7/16	5-1/2	4-1/8	1-1/2	3/4	1/2	1/2	2-25/32	1.748	0.688	1-1/2	3/8	HC205-14 HC205-15 HC205-16 HC205	P205	1.94
30	1-1/16 1-1/8 1-3/16 1-1/4	HCP206-17 HCP206-18 HCP206-19 HCP206-20 HCP206	1-11/16	6-1/2	4-3/4	1-7/8	13/16	21/32	19/32	3-5/16	1.905	0.720	1-3/4	1/2	HC206-17 HC206-18 HC206-19 HC206-20 HC206	P206	3.22
35	1-1/4 1-5/16 1-3/8 1-7/16	HCP207-20 HCP207-21 HCP207-22 HCP207-23 HCP207	1-7/8	6-9/16	5	1-7/8	13/16	21/32	5/8	3-21/32	2.016	0.742	2-3/16	1/2	HC207-20 HC207-21 HC207-22 HC207-23 HC207	P207	3.84
40	1-1/2 1-9/16	HCP208-24 HCP208-25 HCP208	1-15/16	7-1/4	5-13/32	2-1/8	13/16	21/32	21/32	3-27/32	2.220	0.844	2-3/8	1/2	HC208-24 HC208-25 HC208	P208	4.96
45	1-5/8 1-11/16 1-3/4	HCP209-26 HCP209-27 HCP209-28 HCP209	2-1/8	7-15/32	5-3/4	2-1/8	13/16	21/32	21/32	4-3/16	2.220	0.844	2-1/2	1/2	HC209-26 HC209-27 HC209-28 HC209	P209	5.58
50	1-7/8 1-15/16 2	HCP210-30 HCP210-31 HCP210-32 HCP210	2-1/4	8	6-1/4	2-3/8	7/8	25/32	3/4	4-7/16	2.468	0.969	2-3/4	5/8	HC210-30 HC210-31 HC210-32 HC210	P210	6.92
55	2 2-1/8 2-3/16	HCP211-32 HCP211-34 HCP211-35 HCP211	2-1/2	8-5/8	6-23/32	2-3/8	7/8	25/32	3/4	4-29/32	2.814	1.049	3	5/8	HC211-32 HC211-34 HC211-35 HC211	P211	8.71
60	2-1/4 2-3/8 2-7/16	HCP212-36 HCP212-38 HCP212-39 HCP212	2-3/4	9-1/2	7-1/4	2-3/4	1	25/32	7/8	5-7/16	3.062	1.219	3-5/8	3/8	HC212-36 HC212-38 HC212-39 HC212	P212	12.10

PILLOW BLOCK

ECCENTRIC LOCKING COLLAR TYPE: LOW CENTER HEIGHT

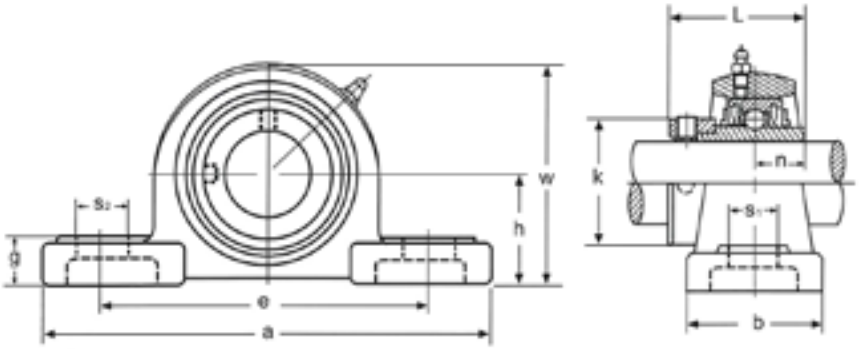

HCAK200 Series

Shaft Dia.		RBI Unit No.	Dimensions (in.)											Bolt Used (in.)	Bearing No.	Housing No.	Weight (lbs.)
mm.	in.		h	a	e	b	S_2	S_1	g	W	L	n	k				
20	3/4	HCAK204-12 HCAK204	1-1/4	5-1/4	3-7/8	1-5/8	9/16	7/16	9/16	2-1/2	1.720	0.673	1-1/4	3/8	HC204-12 HC204	AK204	1.96
25	7/8 15/16 1	HCAK205-14 HCAK205-15 HCAK205-16 HCAK205	1-5/16	5-1/2	4-1/8	1-3/4	9/16	7/16	5/8	2-11/16	1.748	0.688	1-1/2	3/8	HC205-14 HC205-15 HC205-16 HC205	AK205	2.25
30	1-1/16 1-1/8 1-3/16 1-1/4	HCAK206-17 HCAK206-18 HCAK206-19 HCAK206-20 HCAK206	1-9/16	6-5/16	4-3/4	1-7/8	3/4	9/16	11/16	3-5/32	1.905	0.720	1-3/4	1/2	HC206-17 HC206-18 HC206-19 HC206-20 HC206	AK206	3.20
35	1-1/4 1-5/16 1-3/8 1-7/16	HCAK207-20 HCAK207-21 HCAK207-22 HCAK207-23 HCAK207	1-13/16	6-9/16	5	1-7/8	3/4	9/16	3/4	3-5/8	2.016	0.742	2-3/16	1/2	HC207-20 HC207-21 HC207-22 HC207-23 HC207	AK207	4.08
40	1-1/2 1-9/16	HCAK208-24 HCAK208-25 HCAK208	1-15/16	7-1/8	5-1/2	2-1/8	3/4	9/16	3/4	3-15/16	2.220	0.844	2-3/8	1/2	HC208-24 HC208-25 HC208	AK208	4.94
45	1-5/8 1-11/16 1-3/4	HCAK209-26 HCAK209-27 HCAK209-28 HCAK209	2-1/16	7-1/2	5-3/4	2-1/8	3/4	9/16	13/16	4-13/16	2.220	0.844	2-1/2	1/2	HC209-26 HC209-27 HC209-28 HC209	AK209	5.73
50	1-7/8 1-15/16 2	HCAK210-30 HCAK210-31 HCAK210-32 HCAK210	2-3/16	8	6-1/4	2-1/4	3/4	9/16	7/8	4-7/16	2.468	0.989	2-3/4	1/2	HC210-30 HC210-31 HC210-32 HC210	AK210	6.90
55	2 2-1/8 2-3/16	HCAK211-32 HCAK211-34 HCAK211	2-7/16	9-1/8	7-1/8	2-3/8	15/16	11/16	1	4-29/32	2.814	1.049	3	5/8	HC211-32 HC211-34 HC211	AK211	9.39
60	2-1/4 2-3/8 2-7/16	HCAK212-36 HCAK212-38 HCAK212-39 HCAK212	2-11/16	9-1/2	7-1/2	2-1/2	15/16	11/16	1-1/8	5-3/8	3.062	1.219	3-5/16	5/8	HC212-36 HC212-38 HC212-39 HC212	AK212	1.80
65	2-15/16 3	HCAK215-47 HCAK215-48	3-5/16	12	9-1/2	3-1/4	1-1/4	7/8	1-1/2	6-17/32	3.374	1.469	4-1/32	3/4	HC215-47 HC215-48	AK215	19.90

CALL 1-800-708-2128 TO ORDER.

PILLOW BLOCK

SET SCREW TYPE - LIGHT DUTY: HIGH CENTER HEIGHT

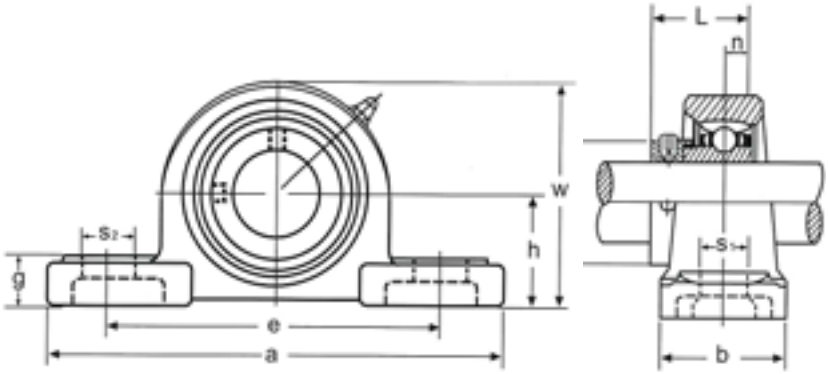

SBP200 Series

Shaft Dia (in.)	RBI Unit No.	Dimensions (in.)										Bolt Used (in.)	Bearing No.	Housing No.	Weight (lbs.)
		h	a	e	b	s_2	s_1	g	w	L	n				
3/4	SBP204-12	1-5/16	5	3-3/4	1-1/2	3/4	1/2	1/2	2-17/32	0.984	0.275	3/8	SB204-12	P204	1.39
7/8 15/16 1	SBP205-14 SBP205-15 SBP205-16	1-7/16	5-1/2	4-1/8	1-1/2	3/4	1/2	1/2	2-25/32	1.062	0.295	3/8	SB205-14 SB205-15 SB205-16	P205	1.83
1-1/16 1-1/8 1-3/16 1-1/4	SBP206-17 SBP206-18 SBP206-19 SBP206-20	1-11/16	6-1/2	4-3/4	1-7/8	13/16	21/32	19/32	3-5/16	1.181	0.315	1/2	SB206-17 SB206-18 SB206-19 SB206-20	P206	2.95
1-1/4 1-5/16 1-3/8 1-7/16	SBP207-20 SBP207-21 SBP207-22 SBP207-23	1-7/8	6-9/16	5	1-7/8	13/16	21/32	5/8	3-21/32	1.259	0.335	1/2	SB207-20 SB207-21 SB207-22 SB207-23	P207	3.46
1-1/2	SBP208-24	1-15/16	7-1/4	5-13/32	2-1/8	13/16	21/32	21/32	3-27/32	1.338	0.354	1/2	SB208-24	P208	4.50

SET SCREW TYPE - LIGHT DUTY: LOW CENTER HEIGHT

SBAK200 Series

Shaft Dia (in.)	RBI Unit No.	Dimensions (in.)										Bolt Used (in.)	Bearing No.	Housing No.	Weight (lbs.)
		h	a	e	b	s_2	s_1	g	w	L	n				
3/4	SBAK204-12	1-1/4	5-1/4	3-7/8	1-5/8	9/16	7/16	9/16	2-1/2	0.984	0.275	3/8	SB204-12	AK204	1.81
7/8 15/16 1	SBAK205-14 SBAK205-15 SBAK205-16	1-5/16	5-1/2	4-1/8	1-3/4	9/16	7/16	5/8	2-11/16	1.062	0.295	3/8	SB205-14 SB205-15 SB205-16	AK205	2.14
1-1/16 1-1/8 1-3/16 1-1/4	SBAK206-17 SBAK206-18 SBAK206-19 SBAK206-20	1-9/16	6-5/16	4-3/4	1-7/8	3/4	9/16	11/16	3-5/32	0.181	0.315	1/2	SB206-17 SB206-18 SB206-19 SB206-20	AK206	2.93
1-1/4 1-5/16 1-3/8 1-7/16	SBAK207-20 SBAK207-21 SBAK207-22 SBAK207-23	1-13/16	6-9/16	5	1-7/8	3/4	9/16	3/4	3-5/8	1.259	0.335	1/2	SB207-20 SB207-21 SB207-22 SB207-23	AK207	3.70
1-1/2	SBAK208-24	1-15/16	7-1/8	5-1/2	2-1/8	3/4	9/16	3/4	3-15/16	1.338	0.354	1/2	SB208-24	AK208	4.50

PILLOW BLOCK

ECCENTRIC LOCKING COLLAR
TYPE - LIGHT DUTY: HIGH CENTER HEIGHT

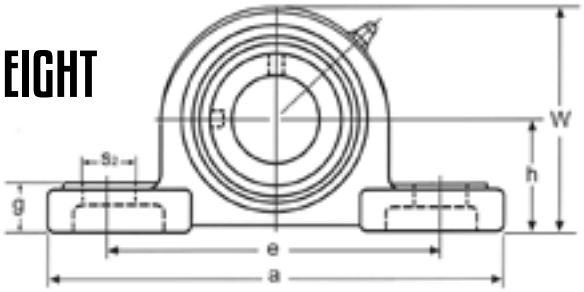

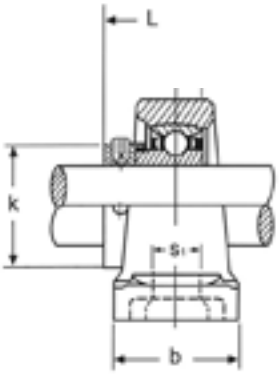

SAP200 Series

Shaft Dia. (in.)	RBI Unit No.	Dimensions (in.)											Bolt Used (in.)	Bearing No.	Housing No.	Weight (lbs.)
		h	a	e	b	s_2	s_1	g	W	L	n	k				
3/4	SAP204-12	1-5/16	5	3-3/4	1-1/2	3/4	1/2	1/2	2-11/32	1.218	0.295	1-1/4	3/8	SA204-12	P204	1.43
7/8 15/16 1	SAP205-14 SAP205-15 SAP205-16	1-7/16	5-1/2	4-1/8	1-1/2	3/4	1/2	1/2	2-25/32	1.218	0.295	1-1/2	3/8	SA205-14 SA205-15 SA205-16	P205	1.87
1-1/16 1-1/8 1-3/16 1-1/4	SAP206-17 SAP206-18 SAP206-19 SAP206-20	1-11/16	6-1/2	4-3/4	1-7/8	13/16	21/32	19/32	3-5/16	1.406	0.354	1-3/4	1/2	SA206-17 SA206-18 SA206-19 SA206-20	P206	3.09
1-1/4 1-5/16 1-3/8 1-7/16	SAP207-20 SAP207-21 SAP207-22 SAP207-23	1-7/8	6-9/16	5	1-7/8	13/16	21/32	5/8	3-21/32	1.531	0.374	2-3/16	1/2	SA207-20 SA207-21 SA207-22 SA207-23	P207	3.70
1-1/2	SAP208-24	1-15/16	7-1/4	5-13/32	2-1/8	13/16	21/32	21/32	3-27/32	1.719	0.433	2-3/8	1/2	SA208-24	P208	4.67

ECCENTRIC LOCKING COLLAR
TYPE - LIGHT DUTY: LOW CENTER HEIGHT

SAAK200 Series

Shaft Dia. (in.)	RBI Unit No.	Dimensions (in.)											Bolt Used (in.)	Bearing No.	Housing No.	Weight (lbs.)
		h	a	e	b	s_2	s_1	g	W	L	n	k				
3/4	SAAK204-12	1-1/4	5-1/4	3-7/8	1-5/8	9/16	7/16	9/16	2-1/2	1.218	0.295	0.295	3/8	SA204-12	AK204	1.85
7/8 15/16 1	SAAK205-14 SAAK205-15 SAAK205-16	1-5/16	5-1/2	4-1/8	1-3/4	9/16	7/16	5/8	2-11/16	1.218	0.295	0.295	3/8	SA205-14 SA205-15 SA205-16	AK205	2.18
1-1/16 1-1/8 1-3/16 1-1/4	SAAK206-17 SAAK206-18 SAAK206-19 SAAK206-20	1-9/16	6-5/16	4-3/4	1-7/8	3/4	9/16	11/16	3-5/32	1.406	0.354	0.354	1/2	SA206-17 SA206-18 SA206-19 SA206-20	AK206	3.06
1-1/4 1-5/16 1-3/8 1-7/16	SAAK207-20 SAAK207-21 SAAK207-22 SAAK207-23	1-13/16	6-9/16	5	1-7/8	3/4	9/16	3/4	3-5/8	1.531	0.374	0.374	1/2	SA207-20 SA207-21 SA207-22 SA207-23	AK207	3.95
1-1/2	SAAK208-24	1-15/16	7-1/8	5-1/2	2-1/8	3/4	9/16	3/4	3-15/16	1.719	0.433	0.433	1/2	SA208-24	AK208	4.65

CALL 1-800-708-2128 TO ORDER.

PILLOW BLOCK

SET SCREW TYPE - NARROW HOUSING: HIGH CENTER HEIGHT

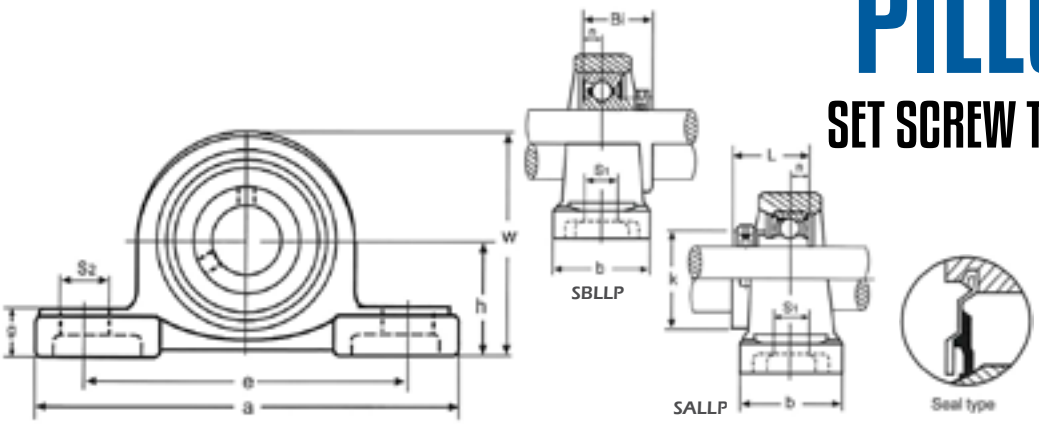

SBLLP200 Series

Shaft Dia. (in.)	RBI Unit No.	Dimensions (in.)										Bolt Used (in.)	Bearing No.	Housing No.	Weight (lbs.)
		h	a	e	b	s_2	s_1	g	w	Bi	n				
1/2 5/8	SBLLP201-8 SBLLP202-10	1-3/16	4-1/2	3-7/16	1	5/8	7/16	15/32	2-1/4	0.866	0.236	3/8	SB201-8 SB202-10	LLP203	0.84
3/4	SBLLP204-12	1-5/16	4-29/32	3-13/16	1-1/16	5/8	7/16	1/2	2-9/16	0.984	0.275	3/8	SB204-12	LLP204	1.03
7/8 15/16 1	SBLLP205-14 SBLLP205-15 SBLLP205-16	1-7/16	5-1/8	3-15/16	1-5/32	5/8	7/16	1/2	2-25/32	1.062	0.295	3/8	SB205-14 SB205-15 SB205-16	LLP205	1.28
1-1/8 1-3/16 1-1/4	SBLLP206-18 SBLLP206-19 SBLLP206-20	1-11/16	6-5/32	4-22/32	1-5/6	13/16	7/16	9/16	3-9/32	1.181	0.315	1/2	SB206-18 SB206-19 SB206-20	LLP206	1.50
1-5/16 1-3/8 1-7/16 1-1/2	SBLLP207-20 SBLLP207-21 SBLLP207-22 SBLLP207-23	1-7/8	6-1/2	5	1-3/8	13/16	9/16	5/8	3-23/32	1.259	0.335	1/2	SB207-20 SB207-21 SB207-22 SB207-23	LLP207	2.07
1-1/2	SBLLP208-24	2	7-1/4	5-1/2	1-15/32	7/8	9/16	23/32	4-1/32	1.338	0.354	1/2	SB208-24	LLP208	3.96

ECCENTRIC LOCKING COLLAR TYPE - NARROW HOUSING: HIGH CENTER HEIGHT

SALLP200 Series

Shaft Dia. (in.)	RBI Unit No.	Dimensions (in.)											Bolt Used (in.)	Bearing No.	Housing No.	Weight (lbs.)
		h	a	e	b	s_2	s_1	g	w	L	n	k				
1/2 5/8	SALLP201-8 SALLP202-10	1-3/16	4-1/2	3-7/16	1	5/8	7/16	15/32	2-1/4	1.125	0.256	1-1/8	3/8	SA201-8 SA202-10	LLP203	0.90
3/4	SALLP204-12	1-5/16	4-29/32	3-13/16	1-1/16	5/8	7/16	1/2	2-9/16	1.218	0.295	1-1/4	3/8	SA204-12	LLP204	1.17
7/8 15/16 1	SALLP205-14 SALLP205-15 SALLP205-16	1-7/16	5-1/8	3-15/16	1-5/32	5/8	7/16	1/2	2-25/32	1.218	0.295	1-1/2	3/8	SA205-14 SA205-15 SA205-16	LLP205	1.39
1-1/8 1-3/16 1-1/4	SALLP206-18 SALLP206-19 SALLP206-20	1-11/16	6-5/32	4-22/32	1-5/6	13/16	7/16	9/16	3-9/32	1.406	0.354	1-3/4	1/2	SA206-18 SA206-19 SA206-20	LLP206	1.67
1-1/4 1-5/16 1-3/8 1-7/16	SALLP207-20 SALLP207-21 SALLP207-22 SALLP207-23	1-7/8	6-1/2	5	1-3/8	13/16	9/16	5/8	3-23/32	1.531	0.374	2-3/16	1/2	SA207-20 SA207-21 SA207-22 SA207-23	LLP207	2.42
1-1/2	SALLP208-24	2	7-1/4	5-1/2	1-15/32	7/8	9/16	23/32	4-1/32	1.719	0.433	2-3/8	1/2	SA208-24	LLP208	4.18

FLANGE BLOCK

SET SCREW TYPE: TWO BOLT

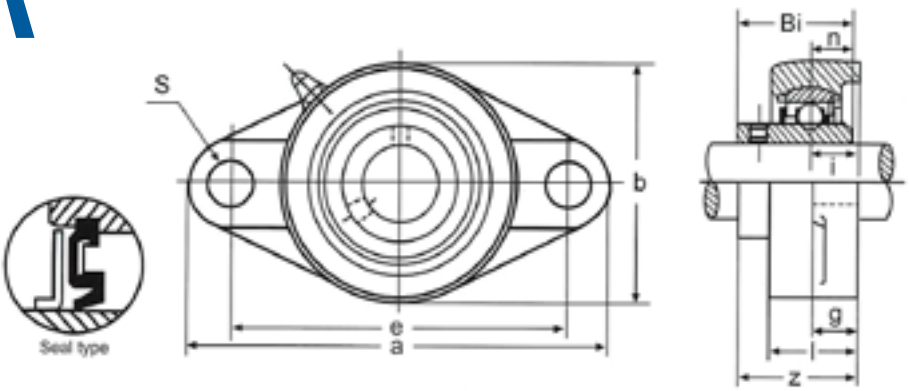

UCFL200 Series

Shaft Dia. mm.	Shaft Dia. in.	RBI Unit No.	Dimensions (in.) a	e	i	g	l	s	b	z	Bi	n	Bolt Used (in.)	Bearing No.	Housing No.	Weight (lbs.)
12 15 17 20	1/2 5/8 3/4	UCFL201-8 UCFL202-10 UCFL204-12 UCFL201 UCFL202 UCFL203 UCFL204	4-7/16	3-35/64	19/32	7/16	1	15/32	2-3/8	1-5/16	1.2205	0.500	3/8	UC201-8 UC202-10 UC204-12 UC201 UC202 UC203 UC204	FL204	1.10
25	7/8 15/16 1	UCFL205-14 UCFL205-15 UCFL205-16 UCFL205	5-1/8	3-57/64	5/8	1/2	1-1/16	5/8	2-11/16	1-15/32	1.3386	0.563	1/2	UC205-14 UC205-15 UC205-16 UC205	FL205	1.54
30	1-1/16 1-1/8 1-3/16 1-1/4	UCFL206-17 UCFL206-18 UCFL206-19 UCFL206-20 UCFL206	5-13/16	4-39/64	45/64	1/2	1-7/32	5/8	3-5/32	1-19/32	1.5	0.626	1/2	UC206-17 UC206-18 UC206-19 UC206-20 UC206	FL206	2.16
35	1-1/4 1-5/16 1-3/8 1-7/16	UCFL207-20 UCFL207-21 UCFL207-22 UCFL207-23 UCFL207	6-11/32	5-1/8	3/4	9/16	1-11/32	5/8	3-17/32	1-3/4	1.689	0.689	1/2	UC207-20 UC207-21 UC207-22 UC207-23 UC207	FL207	2.98
40	1-1/2 1-9/16	UCFL208-24 UCFL208-25 UCFL208	6-7/8	5-43/64	53/64	9/16	1-13/32	5/8	3-15/16	2-1/64	1.937	0.748	1/2	UC208-24 UC208-25 UC208	FL208	3.73
45	1-5/8 1-11/16 1-3/4	UCFL209-26 UCFL209-27 UCFL209-28 UCFL209	7-13/32	5-53/64	55/64	19/32	1-1/2	3/4	4-1/4	2-1/16	1.937	0.748	5/8	UC209-26 UC209-27 UC209-28 UC209	FL209	4.50
50	1-7/8 1-15/16 2	UCFL210-30 UCFL210-31 UCFL210-32 UCFL210	7-3/4	6-3/16	55/64	19/32	1-9/16	3/4	4-17/32	2-5/32	2.0315	0.748	5/8	UC210-30 UC210-31 UC210-32 UC210	FL210	5.07
55	2 2-1/8 2-3/16	UCFL211-32 UCFL211-34 UCFL211-35 UCFL211	8-13/16	7-1/4	63/64	23/32	1-11/16	3/4	5-1/8	2-5/16	2.189	0.874	5/8	UC211-32 UC211-34 UC211-35 UC211	FL211	7.28
60	2-1/4 2-3/8 2-7/16	UCFL212-36 UCFL212-38 UCFL212-39 UCFL212	9-27/32	7-61/64	1-9/64	23/32	1-7/8	29/32	5-1/2	2-23/32	2.563	1.000	3/4	UC212-36 UC212-38 UC212-39 UC212	FL212	9.48
65	2-1/2	UCFL213-40 UCFL213	10-5/32	8-17/64	1-3/16	25/32	1-31/32	29/32	6-3/32	2-3/4	2.563	1.000	3/4	UC213-40 UC213	FL213	11.90

CALL 1-800-708-2128 TO ORDER.

FLANGE BLOCK

SET SCREW TYPE: TWO BOLT

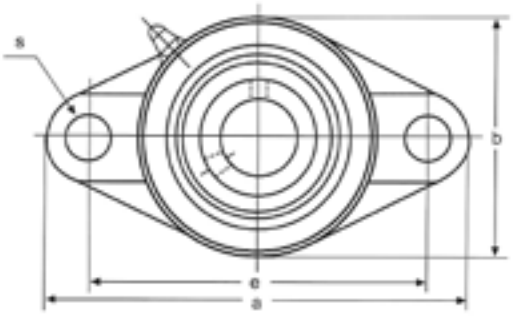

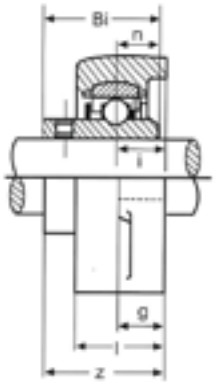

UCFT200 Series

Shaft Dia.		RBI Unit No.	Dimensions (in.)										Bolt Used (in.)	Bearing No.	Housing No.	Weight (lbs.)
mm.	in.		a	e	i	g	l	s	b	z	Bi	n				
12 15 17 20	1/2 5/8 3/4	UCFT201-8 UCFT202-10 UCFT204-12 UCFT201 UCFT202 UCFT203 UCFT204	4-13/32	3	3/4	7/16	1-5/32	13/32	2-3/8	1-25/32	1.2205	0.500	5/16	UC201-8 UC202-10 UC204-12 UC201 UC202 UC203 UC204	FT204	1.28
25	7/8 15/16 1	UCFT205-14 UCFT205-15 UCFT205-16 UCFT205	4-7/8	3-57/64	25/32	17/32	1-7/32	1/2	2-3/4	1-27/64	1.3386	0.563	3/8	UC205-14 UC205-15 UC205-16 UC205	FT205	1.83
30	1-1/16 1-1/8 1-3/16 1-1/4	UCFT206-17 UCFT206-18 UCFT206-19 UCFT206-20 UCFT206	5-9/16	4-19/32	53/64	17/32	1-11/32	1/2	3-1/4	2	1.500	0.626	3/8	UC206-17 UC206-18 UC206-19 UC206-20 UC206	FT206	2.32
35	1-1/4 1-5/16 1-3/8 1-7/16	UCFT207-20 UCFT207-21 UCFT207-22 UCFT207-23 UCFT207	6-1/8	5-1/8	27/32	9/16	1-7/16	35/64	3-3/4	2-1/8	1.689	0.689	7/16	UC207-20 UC207-21 UC207-22 UC207-23 UC207	FT207	3.46
40	1-1/2 1-9/16	UCFT208-24 UCFT208-25 UCFT208	6-3/4	5-21/32	15/16	9/16	1-17/32	35/64	4-1/8	2-5/16	1.937	0.748	7/16	UC208-24 UC208-25 UC208	FT208	4.34
45	1-5/8 1-11/16 1-3/4	UCFT209-26 UCFT209-27 UCFT209-28 UCFT209	7-1/16	5-27/32	15/16	9/16	1-9/16	5/8	4-3/8	2-5/16	1.937	0.748	1/2	UC209-26 UC209-27 UC209-28 UC209	FT209	5.12
50	1-7/8 1-15/16 2	UCFT210-30 UCFT210-31 UCFT210-32 UCFT210	7-7/16	6-3/16	1-1/8	9/16	1-27/32	5/8	4-9/16	2-5/8	2.0315	0.748	1/2	UC210-30 UC210-31 UC210-32 UC210	FT210	5.95
55	2 2-1/8 2-3/16	UCFT211-32 UCFT211-34 UCFT211-35 UCFT211	8-1/2	7-1/4	1-17/64	13/16	1-31/32	45/64	5-1/4	2-31/32	2.189	0.874	9/16	UC211-32 UC211-34 UC211-35 UC211	FT211	8.95

FLANGE BLOCK

ECCENTRIC LOCKING COLLAR TYPE: TWO BOLT

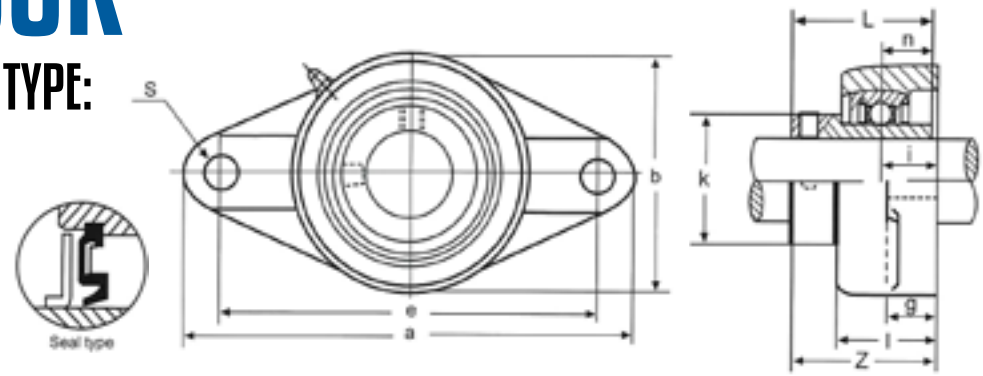

HCFJT200 Series

Shaft Dia.		RBI Unit No.	Dimensions (in.)											Bolt Used (in.)	Bearing No.	Housing No.	Weight (lbs.)
mm.	in.		a	e	i	g	l	s	b	z	L	n	k				
	1/2 5/8	HCFJT201-8 HCFJT202-10	4-13/32	3-17/32	3/4	7/16	1-5/32	13/32	2-3/8	1-25/32	1.713	0.6693	1-1/8 1-1/4	5/16	HC201-8 HC202-10	FJT204	1.10 1
20	3/4	HCFJT204-12 HCFJT204	4-13/32	3-17/32	3/4	7/16	1-5/32	13/32	2-3/8	1-25/32	1.713	0.6693	1-1/4	5/16	HC204-12 HC204	FJT204	1.37
25	7/8 15/16 1	HCFJT205-14 HCFJT205-15 HCFJT205-16 HCFJT205	4-7/8	3-57/64	25/32	17/32	1-7/32	1/2	2-3/4	1-27/32	1.7441	0.685	1-1/2	3/8	HC205-14 HC205-15 HC205-16 HC205	FJT205	1.87
30	1-1/16 1-1/8 1-3/16 1-1/4	HCFJT206-17 HCFJT206-18 HCFJT206-19 HCFJT206-20 HCFJT206	5-9/16	4-19/32	53/64	17/32	1-11/32	1/2	3-1/4	2	1.9016	0.7165	1-3/4	3/8	HC206-17 HC206-18 HC206-19 HC206-20 HC206	FJT206	2.43
35	1-1/4 1-5/16 1-3/8 1-7/16	HCFJT207-20 HCFJT207-21 HCFJT207-22 HCFJT207-23 HCFJT207	6-1/8	5-1/8	27/32	9/16	1-7/16	35/64	3-3/4	2-1/8	2.0118	0.7402	2-3/16	7/16	HC207-20 HC207-21 HC207-22 HC207-23 HC207	FJT207	3.64
40	1-1/2 1-9/16	HCFJT208-24 HCFJT208-25 HCFJT208	6-3/4	5-21/32	15/16	9/16	1-17/32	35/64	4-1/8	2-5/16	2.2165	0.8425	2-3/8	7/16	HC208-24 HC208-25 HC208	FJT208	4.63
45	1-5/8 1-11/16 1-3/4	HCFJT209-26 HCFJT209-27 HCFJT209-28 HCFJT209	7-1/16	5-27/32	15/16	9/16	1-9/16	5/8	4-3/8	2-5/16	2.2165	0.8425	2-1/2	1/2	HC209-26 HC209-27 HC209-28 HC209	FJT209	5.40
50	1-7/8 1-15/16 2	HCFJT210-30 HCFJT210-31 HCFJT210-32 HCFJT210	7-7/16	6-3/16	1-1/8	9/16	1-27/32	5/8	4-9/16	2-5/8	2.4685	0.9685	2-3/4	1/2	HC210-30 HC210-31 HC210-32 HC210	FJT210	6.39
55	2 2-1/8 2-3/16	HCFJT211-32 HCFJT211-34 HCFJT211-35 HCFJT211	8-1/2	7-1/4	1-17/64	13/16	1-31/32	45/64	5-1/4	2-31/32	2.8110	1.0906	3	9/16	HC211-32 HC211-34 HC211-35 HC211	FJT211	9.59
60	2-1/4 2-3/8 2-7/16	HCFJT212-36 HCFJT212-38 HCFJT212-39 HCFJT212	9-15/16	8	1-3/8	55/64	2-7/64	27/32	5-7/16	3-3/16	3.0662	1.219	3.312	9/16	HC212-36 HC212-38 HC212-39 HC212	FJT212	8.13

CALL 1-800-708-2128 TO ORDER.

FLANGE BLOCK

SET SCREW TYPE - LIGHT DUTY: TWO BOLT

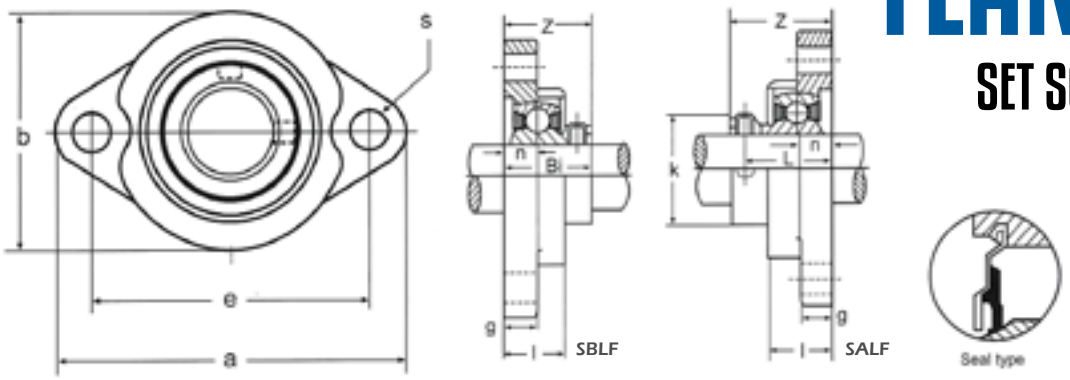

SBLF200 Series

Shaft Dia (in.)	RBI Unit No.	Dimensions (in.)									Bolt Used (in.)	Bearing No.	Housing No.	Weight (lbs.)
		a	e	g	l	s	b	z	Bi	m				
1/2 5/8	SBLF201-8 SBLF202-10	3-3/16	2-1/2	3/8	23/32	5/16	2-7/32	1	0.866	0.236	1/4	SB201-8 SB202-10	LF203	0.60
3/4	SBLF204-12	3-17/32	2-13/16	7/16	25/32	25/64	2-13/32	1-5/32	0.984	0.275	5/16	SB204-12	LF204	0.66
7/8 15/16 1	SBLF205-14 SBLF205-15 SBLF205-16	3-3/4	2-63/64	7/16	25/32	25/64	2-17/32	1-3/16	1.062	0.295	5/16	SB205-14 SB205-15 SB205-16	LF205	0.86
1-1/16 1-1/8 1-3/16 1-1/4	SBLF206-17 SBLF206-18 SBLF206-19 SBLF206-20	4-7/16	3-9/16	15/32	7/8	15/32	3	1-11/32	1.181	0.315	3/8	SB206-17 SB206-18 SB206-19 SB206-20	LF206	1.23
1-1/4 1-5/16 1-3/8 1-7/16	SBLF207-20 SBLF207-21 SBLF207-22 SBLF207-23	4-13/16	3-15/16	33/64	15/16	15/32	3-1/2	1-7/16	1.259	0.335	3/8	SB207-20 SB207-21 SB207-22 SB207-23	LF207	1.70

ECCENTRIC LOCKING COLLAR TYPE - LIGHT DUTY: TWO BOLT

SALF200 Series

Shaft Dia (in.)	RBI Unit No.	Dimensions (in.)										Bolt Used (in.)	Bearing No.	Housing No.	Weight (lbs.)
		a	e	g	l	s	b	z	L	n	k				
1/2 5/8	SALF201-8 SALF202-10	3-3/16	2-1/2	3/8	23/32	5/16	2-7/32	1-1/4	1.125	0.256	1-1/8	1/4	SA201-8 SA202-10	LF203	0.66
3/4	SALF204-12	3-17/32	2-13/16	7/16	25/32	25/64	2-13/32	1-3/8	1.128	0.295	1-1/4	5/16	SA204-12	LF204	0.75
7/8 15/16 1	SALF205-14 SALF205-15 SALF205-16	3-3/4	2-63/64	7/16	25/32	25/64	2-17/32	1-3/8	1.128	0.295	1-1/2	5/16	SA205-14 SA205-15 SA205-16	LF205	0.97
1-1/16 1-1/8 1-3/16 1-1/4	SALF206-17 SALF206-18 SALF206-19 SALF206-20	4-7/16	3-9/16	15/32	7/8	15/32	3	1-17/32	1.406	0.354	1-3/4	3/8	SA206-17 SA206-18 SA206-19 SA206-20	LF206	1.41
1-1/4 1-5/16 1-3/8 1-7/16	SALF207-20 SALF207-21 SALF207-22 SALF207-23	4-13/16	3-15/16	33/64	15/16	15/32	3-1/2	1-11/16	1.531	0.374	2-3/16	3/8	SA207-20 SA207-21 SA207-22 SA207-23	LF207	2.03

FLANGE BLOCK

SET SCREW TYPE - LIGHT DUTY: DUCTILE IRON

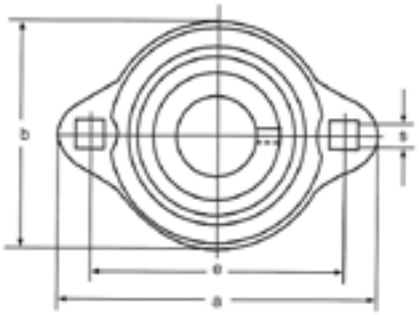

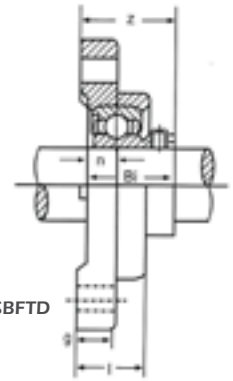

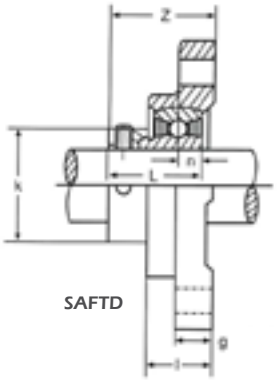

SBFTD200 Series

Shaft Dia. (in.)	RBI Unit No.	Dimensions (in.)									Bolt Used (in.)	Bearing No.	Housing No.	Weight (lbs.)
		a	e	g	l	s	b	z	Bi	n				
1/2 5/8	SBFTD201-8 SBFTD202-10	3-1/4	2-9/16	27/64	23/32	9/32	2-9/32	1-17/64	0.866	0.236	1/4	SB201-8 SB202-10	FTD203	0.51
3/4	SBFTD204-12	3-11/16	2-13/16	7/16	49/64	11/32	2-39/64	1-13/64	0.984	0.275	5/16	SB204-12	FTD204	0.60
7/8 15/16 1	SBFTD205-14 SBFTD205-15 SBFTD205-16	3-3/4	3	7/16	51/64	11/32	2-1/2	1-17/64	1.062	0.295	5/16	SB205-14 SB205-15 SB205-16	FTD205	0.84
1-1/16 1-1/8 1-3/16 1-1/4	SBFTD206-17 SBFTD206-18 SBFTD206-19 SBFTD206-20	4-9/16	3-17/32	1/2	55/64	13/32	3-13/64	1-13/32	1.181	0.315	3/8	SB206-17 SB206-18 SB206-19 SB206-20	FTD206	1.19
1-1/4 1-5/16 1-3/8 1-7/16	SBFTD207-20 SBFTD207-21 SBFTD207-22 SBFTD207-23	4-13/16	3-15/16	1/2	15/16	13/32	3-13/64	1-17/32	1.181	0.315	3/8	SB207-20 SB207-21 SB207-22 SB207-23	FTD207	1.57

ECCENTRIC LOCKING COLLAR TYPE - LIGHT DUTY: DUCTILE IRON

SAFTD200 Series

Shaft Dia. (in.)	RBI Unit No.	Dimensions (in.)										Bolt Used (in.)	Bearing No.	Housing No.	Weight (lbs.)
		a	e	g	l	s	b	z	L	n	k				
1/2 5/8	SAFTD201-8 SAFTD202-10	3-3/16	2-9/16	27/64	23/32	9/32	2-9/32	1-21/64	1.125	0.256	1-1/8	1/4	SA201-8 SA202-10	FTD203	0.57
3/4	SAFTD204-12	3-11/16	2-13/16	7/16	49/64	11/32	2-39/64	1-7/16	1.218	0.295	1-1/4	5/16	SA204-12	FTD204	0.64
7/8 15/16 1	SAFTD205-14 SAFTD205-15 SAFTD205-16	3-3/4	3	7/16	51/64	11/32	2-1/2	1-27/64	1.218	0.295	1-1/2	5/16	SA205-14 SA205-15 SA205-16	FTD205	0.88
1-1/16 1-1/8 1-3/16 1-1/4	SAFTD206-17 SAFTD206-18 SAFTD206-19 SAFTD206-20	4-9/16	3-17/32	1/2	55/64	13/32	3-13/64	1-41/64	1.406	0.354	1-3/4	3/8	SA206-17 SA206-18 SA206-19 SA206-20	FTD206	1.32
1-1/4 1-5/16 1-3/8 1-7/16	SAFTD207-20 SAFTD207-21 SAFTD207-22 SAFTD207-23	4-13/16	3-15/16	1/2	15/16	13/32	3-13/64	1-51/64	1.531	0.374	2-3/16	3/8	SA207-20 SA207-21 SA207-22 SA207-23	FTD207	1.85

CALL 1-800-708-2128 TO ORDER.

FLANGE BLOCK

SET SCREW TYPE: FOUR BOLT

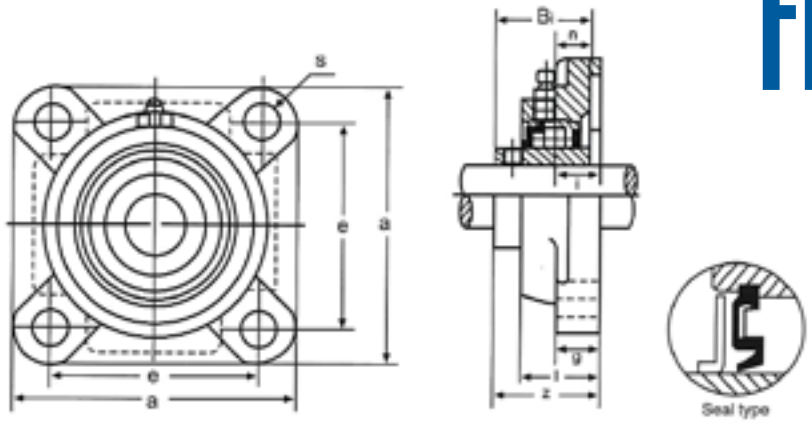

UCF200 Series

Shaft Dia. mm.	Shaft Dia. in.	RBI Unit No.	Dimensions (in.) a	e	i	g	l	s	z	Bi	n	Bolt Used (in.)	Bearing No.	Housing No.	Weight (lbs.)
12 15 17 20	1/2 5/8 3/4	UCF201-8 UCF202-10 UCF204-12 UCF201 UCF202 UCF203 UCF204	3-3/8	2-33/64	19/32	15/32	1	15/32	1-5/16	1.2205	0.500	3/8	UC201-8 UC202-10 UC204-12 UC201 UC202 UC203 UC204	F204	1.43
25	7/8 15/16 1	UCF205-14 UCF205-15 UCF205-16 UCF205	3-3/4	2-3/4	5/8	9/16	1-1/16	15/32	1-13/32	1.3386	0.563	3/8	UC205-14 UC205-15 UC205-16 UC205	F205	1.87
30	1-1/16 1-1/8 1-3/16 1-1/4	UCF206-17 UCF206-18 UCF206-19 UCF206-20 UCF206	4-1/4	3-17/64	45/64	9/16	1-7/32	15/32	1-19/32	1.500	0.626	3/8	UC206-17 UC206-18 UC206-19 UC206-20 UC206	F206	2.54
35	1-1/4 1-5/16 1-3/8 1-7/16	UCF207-20 UCF207-21 UCF207-22 UCF207-23 UCF207	4-19/32	3-5/8	3/4	5/8	1-11/32	35/64	1-3/4	1.689	0.689	7/16	UC207-20 UC207-21 UC207-22 UC207-23 UC207	F207	3.53
40	1-1/2 1-9/16	UCF208-24 UCF208-25 UCF208	5-1/8	4-1/64	53/64	5/8	1-13/32	5/8	2-1/64	1.937	0.748	1/2	UC208-24 UC208-25 UC208	F208	4.52
45	1-5/8 1-11/16 1-3/4	UCF209-26 UCF209-27 UCF209-28 UCF209	5-13/32	4-9/65	55/64	23/32	1-1/2	5/8	2-1/16	1.937	0.748	1/2	UC209-26 UC209-27 UC209-28 UC209	F209	5.25
50	1-7/8 1-15/16 2	UCF210-30 UCF210-31 UCF210-32 UCF210	5-5/8	4-3/8	55/64	23/32	1-9/16	5/8	2-5/32	2.0315	0.748	1/2	UC210-30 UC210-31 UC210-32 UC210	F210	5.51
55	2 2-1/8 2-3/16	UCF211-32 UCF211-34 UCF211-35 UCF211	6-3/8	5-1/8	63/64	25/32	1-11/16	3/4	2-5/16	2.189	0.874	5/8	UC211-32 UC211-34 UC211-35 UC211	F211	7.94
60	2-1/4 2-3/8 2-7/16	UCF212-36 UCF212-38 UCF212-39 UCF212	6-7/8	5-5/8	1-9/64	25/32	1-7/8	3/4	2-23/32	2.563	1.000	5/8	UC212-36 UC212-38 UC212-39 UC212	F212	10.80
65	2-1/2	UCF213-40 UCF213	7-3/8	5-55/64	1-3/16	25/32	1-31/32	3/4	2-3/4	2.563	1.000	5/8	UC213-40 UC213	F213	13.00
70	2-3/4	UCF214-44 UCF214	7-19/32	5-63/64	1-7/32	15/64	2-1/8	3/4	2-31/32	2.937	1.189	5/8	UC214-44 UCP214	F214	13.90
75	2-15/16 3	UCF215-47 UCF215-48 UCF215	7-7/8	6-17/64	1-11/32	15/16	2-7/32	3/4	3-3/32	3.063	1.311	5/8	UC215-47 UC215-48 UC215	F215	15.00

FLANGE BLOCK

ECCENTRIC LOCKING COLLAR TYPE: FOUR BOLT

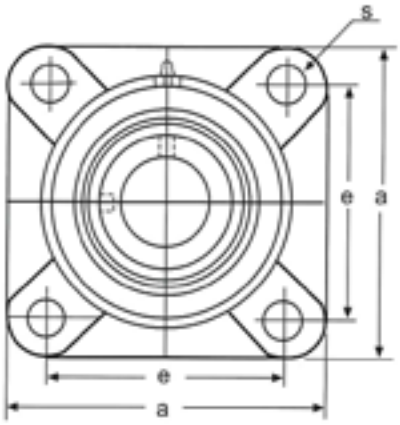

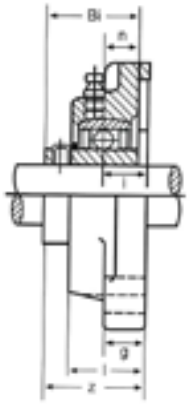

HCFS200 Series

Shaft Dia.		RBI Unit No.	Dimensions (in.)									Bolt Used (in.)	Bearing No.	Housing No.	Weight (lbs.)
mm.	in.		a	e	i	g	l	s_1	z	L	n				
12 15 17 20	1/2 5/8 3/4	HCFS201-8 HCFS202-10 HCFS204-12 HCFS201 HCFS202 HCFS203 HCFS204	3-3/8	2-1/2	0.807	3/8	1-5/16	7/16	1-55/64	1.7126	0.6693	3/8	HC201-8 HC202-10 HC204-12 HC201 HC202 HC203 HC204	FS204	1.68
25	7/8 15/16 1	HCFS205-14 HCFS205-15 HCFS205-16 HCFS205	3-3/4	2-3/4	0.826	7/16	1-3/8	29/64	1-57/64	1.7441	0.685	3/8	HC205-14 HC205-15 HC205-16 HC205	FS205	2.77
30	1-1/16 1-1/8 1-3/16 1-1/4	HCFS206-17 HCFS206-18 HCFS206-19 HCFS206-20 HCFS206	4-1/4	3-1/4	0.826	5/8	1-15/32	33/64	2-1/64	1.9016	0.7165	7/16	HC206-17 HC206-18 HC206-19 HC206-20 HC206	FS206	3.09
35	1-1/4 1-5/16 1-3/8 1-7/16	HCFS207-20 HCFS207-21 HCFS207-22 HCFS207-23 HCFS207	4-5/8	3-5/8	0.906	1/2	1-1/2	33/64	2-11/64	2.0118	0.7402	7/16	HC207-20 HC207-21 HC207-22 HC207-23 HC207	FS207	4.01
40	1-1/2 1-9/16	HCFS208-24 HCFS208-25 HCFS208	5-1/8	4	1	21/32	1-17/32	35/64	2-3/8	2.2165	0.8425	1/2	HC208-24 HC208-25 HC208	FS208	4.78
45	1-5/8 1-11/16 1-3/4	HCFS209-26 HCFS209-27 HCFS209-28 HCFS209	5-3/8	4-1/8	1	23/32	1-9/16	5/8	2-3/8	2.2165	0.8425	9/16	HC209-26 HC209-27 HC209-28 HC209	FS209	5.64
50	1-7/8 1-15/16 2	HCFS210-30 HCFS210-31 HCFS210-32 HCFS210	5-5/8	4-3/8	1.142	5/8	1-13/16	5/8	2-41/64	4.4688	0.9685	9/16	HC210-30 HC210-31 HC210-32 HC210	FS210	6.61
55	2 2-1/8 2-3/16	HCFS211-32 HCFS211-34 HCFS211-35 HCFS211	6-3/8	5-1/8	1.260	11/16	1-31/32	43/64	2-15/16	2.811	1.0906	5/8	HC211-32 HC211-34 HC211-35 HC211	FS211	8.62
60	2-1/4 2-3/8 2-7/16	HCFS212-36 HCFS212-38 HCFS212-39 HCFS212	6-7/8	5-5/8	1.343	11/16	2-5/32	43/64	3-3/16	3.063	1.2165	5/8	HC212-36 HC212-38 HC212-39 HC212	FS212	10.90

CALL 1-800-708-2128 TO ORDER.

FLANGE BLOCK

SET SCREW TYPE - THREE BOLT: DUCTILE IRON

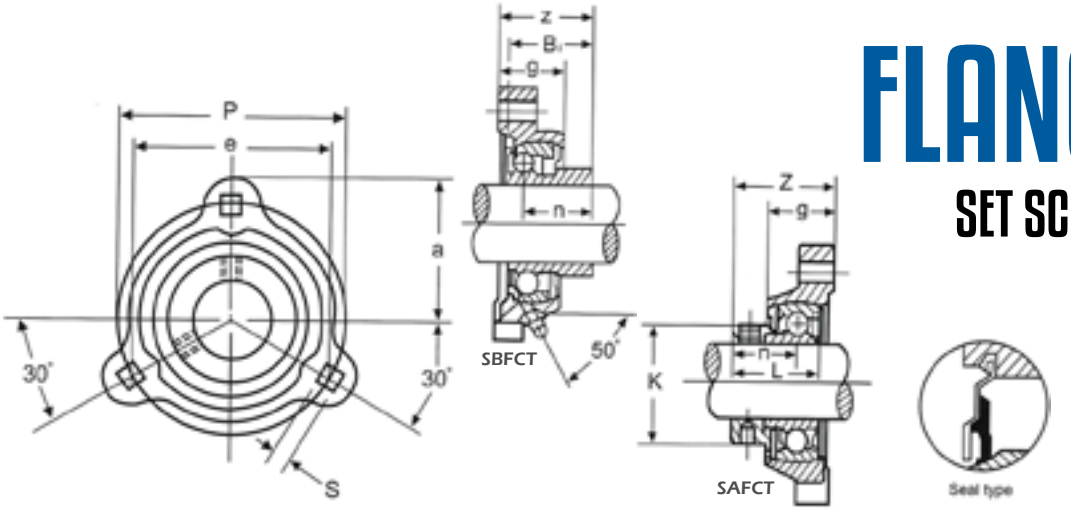

SBFCT200 Series

Shaft Dia. (in.)	RBI Unit No.	Dimensions (in.)								Bolt Used (in.)	Bearing No.	Housing No.	Weight (lbs.)
		a	p	e	g	z	s	Bi	n				
1/2 5/8	SBFCT201-8 SBFCT202-10	1-19/32	2-1/2	2.165	11/16	1-1/64	9/32	0.8661	0.236	1/4	SB201-8 SB202-10	FCT203	0.46
3/4	SBFCT204-12	1-25/32	2-13/16	2.436	25/32	1-9/64	11/32	0.9843	0.275	5/16	SB204-12	FCT204	0.71
7/8 15/16 1	SBFCT205-14 SBFCT205-15 SBFCT205-16	1-7/8	3	2.598	25/32	1-11/64	11/32	1.063	0.295	5/16	SB205-14 SB205-15 SB205-16	FCT205	0.82
1-1/16 1-1/8 1-3/16 1-1/4	SBFCT206-17 SBFCT206-18 SBFCT206-19 SBFCT206-20	2-7/32	3-9/16	3.085	7/8	1-11/32	13/32	1.8111	0.315	3/8	SB206-17 SB206-18 SB206-19 SB206-20	FCT206	0.73
1-1/4 1-5/16 1-3/8 1-7/16	SBFCT207-20 SBFCT207-21 SBFCT207-22 SBFCT207-23	2-13/32	3-15/16	3.410	15/16	1-7/16	13/32	1.2598	0.335	3/8	SB207-20 SB207-21 SB207-22 SB207-23	FCT207	1.57

ECCENTRIC LOCKING COLLAR TYPE - THREE BOLT: DUCTILE IRON

SAFCT200 Series

Shaft Dia. (in.)	RBI Unit No.	Dimensions (in.)									Bolt Used (in.)	Bearing No.	Housing No.	Weight (lbs.)
		a	p	e	g	z	s	L	n	k				
1/2 5/8	SAFCT201-8 SAFCT202-10	1-19/32	2-1/2	2.165	11/16	1-1/4	9/32	1.125	0.256	1-1/8	1/4	SA201-8 SA202-10	FCT203	0.57
3/4	SAFCT204-12	1-25/32	2-13/16	2.436	25/32	1-11/32	11/32	1.218	0.295	1-1/4	5/16	SA204-12	FCT204	0.75
7/8 15/16 1	SAFCT205-14 SAFCT205-15 SAFCT205-16	1-7/8	3	2.598	25/32	1-11/32	11/32	1.218	0.295	1-1/2	5/16	SA205-14 SA205-15 SA205-16	FCT205	0.86
1-1/16 1-1/8 1-3/16 1-1/4	SAFCT206-17 SAFCT206-18 SAFCT206-19 SAFCT206-20	2-7/32	3-9/16	3.085	7/8	1-17/32	13/32	1.406	0.354	1-3/4	3/8	SA206-17 SA206-18 SA206-19 SA206-20	FCT206	1.35
1-1/4 1-5/16 1-3/8 1-7/16	SAFCT207-20 SAFCT207-21 SAFCT207-22 SAFCT207-23	2-13/32	3-15/16	3.410	15/16	1-21/32	13/32	1.531	0.374	2-3/16	3/8	SA207-20 SA207-21 SA207-22 SA207-23	FCT207	1.81

FLANGE BLOCK

SET SCREW TYPE:
THREE BOLT FLANGE BRACKET

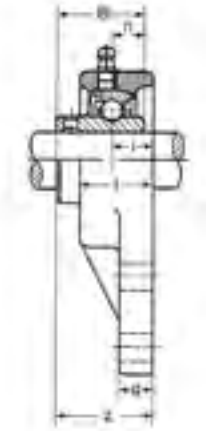

UCFB200 Series

Shaft Dia. (in.)	RBI Unit No.	Dimensions (in.)												Bolt Used (in.)	Bearing No.	Housing No.	Weight (lbs.)
		a	h	e	J	i	g	s	b	f	z	Bi	n				
1/2 5/8 11/16 3/4	UCFB201-8 UCFB202-10 UCFB204-11 UCFB204-12	4-1/4	1-11/16	1-1/2	7/8	5/8	5/16	25/64	2-1/2	2-3/8	1-11/32	1.2205	0.500	5/16	UC201-8 UC202-10 UC204-11 UC204-12	FB204	1.43
7/8 15/16 1	UCFB205-14 UCFB205-15 UCFB205-16	4-3/4	1-13/16	1-5/8	1-1/8	21/32	3/8	25/64	2-3/4	2-1/2	1-7/16	1.339	0.563	5/16	UC205-14 UC205-15 UC205-16	FB205	2.00
1-1/16 1-1/8 1-3/16 1-1/4	UCFB206-17 UCFB206-18 UCFB206-19 UCFB206-20	5-3/8	2-1/16	1-7/8	1-1/4	47/64	3/8	25/64	3-1/4	2-3/4	1-39/64	1.500	0.626	5/16	UC206-17 UC206-18 UC206-19 UC206-20	FB206	2.50
1-1/4 1-5/16 1-3/8 1-7/16	UCFB207-20 UCFB207-21 UCFB207-22 UCFB207-23	6-1/8	2-3/8	2	1-1/4	53-64	1/2	33/64	3-3/4	3-1/4	1-53/64	1.689	0.689	7/16	UC207-20 UC207-21 UC207-22 UC207-23	FB207	2.90
1-1/2 1-9/16	UCFB208-24 UCFB208-25	6-15/32	2-3/8	1-31/32	1-5/8	53/64	5/8	15/32	3-15/16	3-1/16	2-1/64	1.937	0.748	3/8	UC208-24 UC208-25	FB208	3.50
1-5/8 1-11/16 1-3/4	UCFB209-26 UCFB209-27 UCFB209-28	6-27/32	2-9/16	2-1/8	1-11/16	55/64	23/32	15/32	4-3/16	3-5/32	2-1/64	1.937	0.748	3/8	UC209-26 UC209-27 UC209-28	FB209	4.90
1-7/8 1-15/16 2	UCFB210-30 UCFB210-31 UCFB210-32	7-1/2	2-15/16	2-3/4	1-5/8	55/64	1/2	33/64	4-5/8	4	2-7/64	2.032	0.748	7/16	UC210-30 UC210-31 UC210-32	FB210	5.40

CALL 1-800-708-2128 TO ORDER.

TAKE-UP UNIT

SET SCREW TYPE: WIDE SLOT

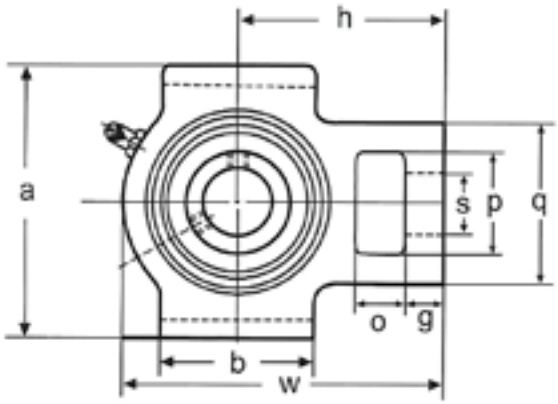

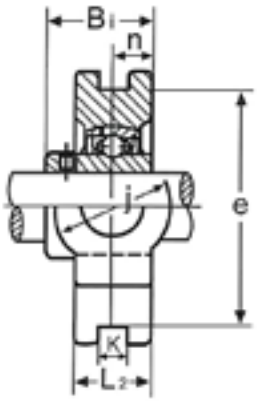

UCST200 Series

Shaft Dia.		RBI Unit No.	Dimensions (in.)															Bearing No.	Housing No.	Weight (lbs.)
mm.	in.		o	g	q	p	s	b	k	e	a	w	j	L_2	h	Bi	n			
12 15 17 20	1/2 5/8 3/4	UCST201-8 UCST202-10 UCST204-12 UCST201 UCST202 UCST203 UCST204	5/8	3/8	2	1-1/4	3/4	2	17/32	3	3-1/2	3-11/16	1-1/4	15/16	2-3/8	1.2205	0.500	UC201-8 UC202-10 UC204-12 UC201 UC202 UC203 UC204	ST204	1.76
25	7/8 15/16 1	UCST205-14 UCST205-15 UCST205-16 UCST205	5/8	3/8	2	1-1/4	7/8	2	17/32	3	3-1/2	3-13/16	1-1/4	15/16	2-7/16	1.3386	0.563	UC205-14 UC205-15 UC205-16 UC205	ST205	1.90
30	1-1/16 1-1/8 1-3/16 1-1/4	UCST206-17 UCST206-18 UCST206-19 UCST206-20 UCST206	5/8	3/8	2-1/16	1-7/16	7/8	2-1/4	17/32	3-1/2	4	4-7/16	1-7/16	15/16	2-3/4	1.500	0.626	UC206-17 UC206-18 UC206-19 UC206-20 UC206	ST206	2.82
35	1-1/4 1-5/16 1-3/8 1-7/16	UCST207-20 UCST207-21 UCST207-22 UCST207-23 UCST207	5/8	1/2	2-1/2	1-7/16	7/8	2-1/2	17/32	3-1/2	4	1-7/16	1-7/16	1-3/16	3-1/16	1.689	0.689	UC207-20 UC207-21 UC207-22 UC207-23 UC207	ST207	3.70
40	1-1/2 1-9/16	UCST208-24 UCST208-25 UCST208	3/4	5/8	3-1/4	1-15/16	1-1/8	3-1/4	11/16	4	4-1/2	5-11/16	1-15/16	1-3/8	3-1/2	1.937	0.748	UC208-24 UC208-25 UC208	ST208	5.34
45	1-5/8 1-11/16 1-3/4	UCST209-26 UCST209-27 UCST209-28 UCST209	3/4	5/8	3-1/4	1-15/16	1-1/8	3-1/4	11/16	4	4-5/8	5-11/16	1-15/16	1-3/8	3-7/16	1.937	0.748	UC209-26 UC209-27 UC209-28 UC209	ST209	5.56
50	1-7/8 1-15/16 2	UCST210-30 UCST210-31 UCST210-32 UCST210	3/4	5/8	3-1/4	1-15/16	1-1/8	3-1/4	11/16	4	4-5/8	5-7/8	1-15/16	1-3/8	3-9/16	2.0315	0.748	UC210-30 UC210-31 UC210-32 UC210	ST210	6.06
55	2 2-1/8 2-3/16	UCST211-32 UCST211-34 UCST211-35 UCST211	1	3/4	4	2-1/2	1-3/8	3-3/4	1-1/16	5-1/8	5-3/4	6-3/4	2-1/2	1-5/8	4-3/16	2.189	0.874	UC211-32 UC211-34 UC211-35 UC211	ST211	9.04
60	2-1/4 2-3/8 2-7/16	UCST212-36 UCST212-38 UCST212-39 UCST212	1-1/4	3/4	4	2-1/2	1-3/8	4	1-1/16	5-1/8	5-3/4	7-5/8	2-1/2	1-13/16	4-11/16	2.563	1.000	UC212-36 UC212-38 UC212-39 UC212	ST212	11.50
65	2-1/2	UCST213-40 UCST213	1-1/4	13/16	4-3/8	2-3/4	1-5/8	4-3/4	1-1/16	5-15/16	6-9/16	8-13/16	2-3/4	2	5-3/8	2.563	1.000	UC213-40 UC213	ST213	15.5

Note: Narrow slot is available upon request.

TAKE-UP UNIT

ECCENTRIC LOCKING COLLAR TYPE: WIDE SLOT

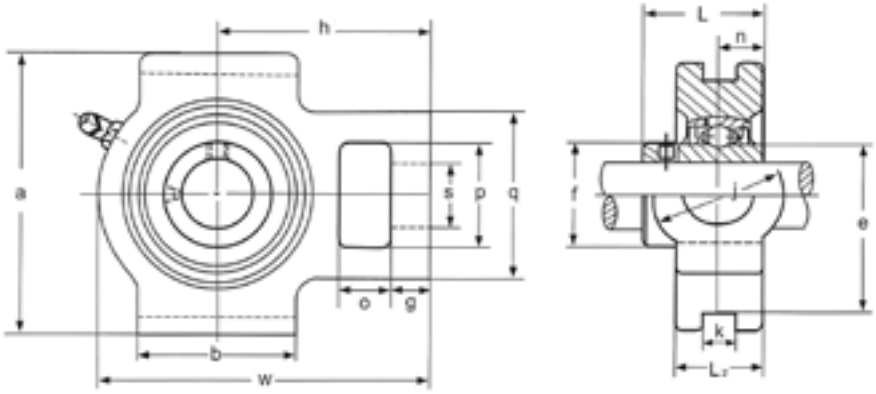

HCST200 Series

Shaft Dia.		RBI Unit No.	Dimensions (in.)															Bearing No.	Housing No.	Weight (lbs.)
mm.	in.		o	g	q	p	s	b	k	e	a	w	j	L_2	h	L	n			
20	3/4	HCST204-12 HCST204	5/8	3/8	2	1-1/4	3/4	2	17/32	3	3-1/2	3-11/16	1-1/4	15/16	2-3/8	1.720	0.673	HC204-12 HC204	ST204	1.85
25	7/8 15/16 1	HCST205-14 HCST205-15 HCST205-16 HCST205	5/8	3/8	2	1-1/4	7/8	2	17/32	3	3-1/2	3-13/16	1-1/4	15/16	2-7/16	1.748	0.688	HC205-14 HC205-15 HC205-16 HC205	ST205	1.94
30	1-1/16 1-1/8 1-3/16 1-1/4	HCST206-17 HCST206-18 HCST206-19 HCST206-20 HCST206	5/8	3/8	2-3/16	1-7/16	7/8	2-1/4	17/32	3-1/2	4	4-7/16	1-7/16	15/16	2-3/4	1.905	0.720	HC206-17 HC206-18 HC206-19 HC206-20 HC206	ST206	2.93
35	1-1/4 1-5/16 1-3/8 1-7/16	HCST207-20 HCST207-21 HCST207-22 HCST207-23 HCST207	5/8	1/2	2-1/2	1-7/16	7/8	2-1/2	17/32	3-1/2	4	1-7/16	1-7/16	1-3/16	3-1/16	2.016	0.742	HC207-20 HC207-21 HC207-22 HC207-23 HC207	ST207	3.88
40	1-1/2 1-9/16	HCST208-24 HCST208-25 HCST208	3/4	5/8	3-1/4	1-15/16	1-1/8	3-1/4	11/16	4	4-1/2	5-11/16	1-15/16	1-3/8	3-1/2	2.220	0.844	HC208-24 HC208-25 HC208	ST208	5.62
45	1-5/8 1-11/16 1-3/4	HCST209-26 HCST209-27 HCST209-28 HCST209	3/4	5/8	3-1/4	1-15/16	1-1/8	3-1/4	11/16	4	4-5/8	5-11/16	1-15/16	1-3/8	3-7/16	2.220	0.844	HC209-26 HC209-27 HC209-28 HC209	ST209	5.84
50	1-7/8 1-15/16 2	HCST210-30 HCST210-31 HCST210-32 HCST210	3/4	5/8	3-1/4	1-15/16	1-1/8	3-1/4	11/16	4	4-5/8	5-7/8	1-15/16	1-3/8	3-9/16	2.468	0.969	HC210-30 HC210-31 HC210-32 HC210	ST210	6.50
55	2 2-1/8 2-3/16	HCST211-32 HCST211-34 HCST211-35 HCST211	1	3/4	4	2-1/2	1-3/8	3-3/4	1-1/16	5-1/8	5-3/4	6-3/4	2-1/2	1-5/8	4-3/16	2.814	1.049	HC211-32 HC211-34 HC211-35 HC211	ST211	9.68
60	2-1/4 2-3/8 2-7/16	HCST212-36 HCST212-38 HCST212-39 HCST212	1-1/4	3/4	4	2-1/2	1-3/8	4	1-1/16	5-1/8	5-3/4	7-5/8	2-1/2	1-13/16	4-11/16	3.062	1.219	HC212-36 HC212-38 HC212-39 HC212	ST212	12.24

Note: Narrow slot is available upon request.

CALL 1-800-708-2128 TO ORDER.

PRESSED STEEL UNIT

SET SCREW TYPE: TWO BOLT FLANGE

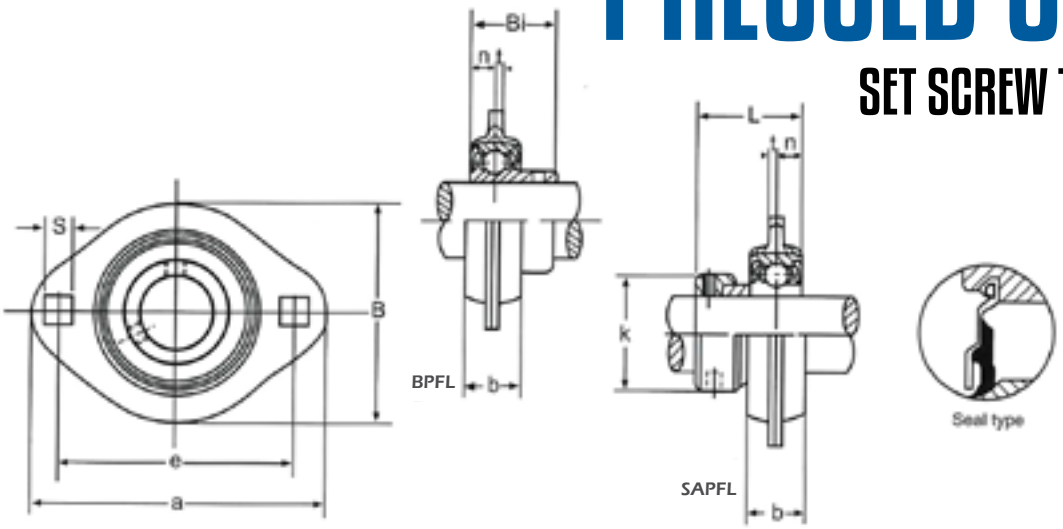

SBPFL200 Series

Shaft Dia. (in.)	RBI Unit No.	Dimensions (in.)								Bolt Used (in.)	Bearing No.	Housing No.	Weight (lbs.)
		a	e	B	t	b	S	Bi	n				
1/2 5/8	SBPFL201-8 SBPFL202-10	3-3/16	2-1/2	2-5/16	0.079	5/8	9/32	.08661	0.236	1/4	SB201-8 SB202-10	PFL203	0.42
3/4	SBPFL204-12	3-17/32	2-13/16	2-5/8	0.079	43/64	23/64	0.9843	0.275	5/16	SB204-12	PFL204	0.53
7/8 15/16 1	SBPFL205-14 SBPFL205-15 SBPFL205-16	3-3/4	3	2-25/32	0.079	51/64	23/64	1.0630	0.295	5/16	SB205-14 SB205-15 SB205-16	PFL205	0.64
1-1/16 1-1/8 1-3/16 1-1/4	SBPFL206-17 SBPFL206-18 SBPFL206-19 SBPFL206-20	4-7/16	3-9/16	3-5/16	0.102	51/64	7/16	1.1811	0.315	3/8	SB206-17 SB206-18 SB206-19 SB206-20	PFL206	0.95
1-1/4 1-5/16 1-3/8 1-7/16	SBPFL207-20 SBPFL207-21 SBPFL207-22 SBPFL207-23	4-15/16	3-15/16	3-11/16	0.102	51/64	7/16	1.2598	0.335	3/8	SB207-20 SB207-21 SB207-22 SB207-23	PFL207	1.19

ECCENTRIC LOCKING COLLAR TYPE: TWO BOLT FLANGE

SAPFL200 Series

Shaft Dia. (in.)	RBI Unit No.	Dimensions (in.)									Bolt Used (in.)	Bearing No.	Housing No.	Weight (lbs.)
		a	e	B	t	b	s	L	n	k				
1/2 5/8	SAPFL201-8 SAPFL202-10	3-3/16	2-1/2	2-5/16	0.079	5/8	9/32	1.1260	0.256	1-1/8	1/4	SA201-8 SA202-10	PFL203	0.49
3/4	SAPFL204-12	3-17/32	2-13/16	2-5/8	0.079	43/64	23/64	1.2205	0.295	1-1/4	5/16	SA204-12	PFL204	0.62
7/8 15/16 1	SAPFL205-14 SAPFL205-15 SAPFL205-16	3-3/4	3	2-25/32	0.079	51/64	23/64	1.2205	0.295	1-1/2	5/16	SA205-14 SA205-15 SA205-16	PFL205	0.73
1-1/16 1-1/8 1-3/16 1-1/4	SAPFL206-17 SAPFL206-18 SAPFL206-19 SAPFL206-20	4-7/16	3-9/16	3-5/16	0.102	51/64	7/16	1.4055	0.354	1-3/4	3/8	SA206-17 SA206-18 SA206-19 SA206-20	PFL206	1.06
1-1/4 1-5/16 1-3/8 1-7/16	SAPFL207-20 SAPFL207-21 SAPFL207-22 SAPFL207-23	4-15/16	3-15/16	3-11/16	0.102	51/64	7/16	1.5315	0.374	2-3/16	3/8	SA207-20 SA207-21 SA207-22 SA207-23	PFL207	1.30

PRESSED STEEL UNIT

SET SCREW TYPE:
ROUND THREE BOLT FLANGE

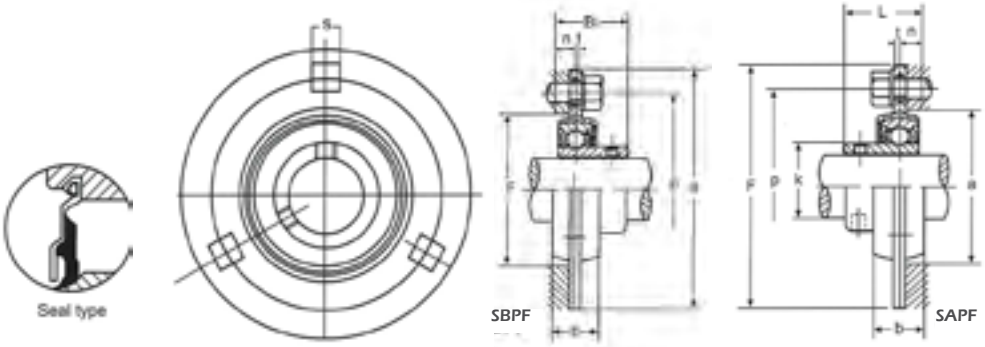

SBPF200 Series

Shaft Dia. (in.)	RBI Unit No.	Dimensions (in.)								Bolt Used (in.)	Bearing No.	Housing No.	Weight (lbs.)
		a	P	t	b	s	F	Bi	n				
1/2 5/8	SBPF201-8 SBPF202-10	3-7/32	2-33/64	0.079	5/8	9/32	1-15/16	0.8661	0.236	1/4	SB201-8 SB202-10	PF203	0.55
3/4	SBPF204-12	3-19/32	2-51/64	0.079	43/64	23/64	2-3/16	0.9843	0.275	5/16	SB204-12	PF204	0.73
7/8 15/16 1	SBPF205-14 SBPF205-15 SBPF205-16	3-3/4	3	0.079	51/64	23/64	2-3/8	1.063	0.295	5/16	SB205-14 SB205-15 SB205-16	PF205	0.84
1-1/16 1-1/8 1-3/16 1-1/4	SBPF206-17 SBPF206-18 SBPF206-19 SBPF206-20	4-7/16	3-9/16	0.102	51/64	7/16	2-13/16	1.181	0.315	3/8	SB206-17 SB206-18 SB206-19 SB206-20	PF206	1.32
1-1/4 1-5/16 1-3/8 1-7/16	SBPF207-20 SBPF207-21 SBPF207-22 SBPF207-23	4-13/16	3-15/16	0.102	51/64	7/16	3-3/16	1.2598	0.335	3/8	SB207-20 SB207-21 SB207-22 SB207-23	PF207	1.65

ECCENTRIC LOCKING COLLAR TYPE:
ROUND THREE BOLT FLANGE

SAPF200 Series

Shaft Dia. (in.)	RBI Unit No.	Dimensions (in.)									Bolt Used (in.)	Bearing No.	Housing No.	Weight (lbs.)
		a	P	t	b	s	F	L	n	K				
1/2 5/8	SAPF201-8 SAPF202-10	3-7/32	2-33/64	0.079	5/8	9/32	1-15/16	1.126	0.256	1-1/8	1/4	SA201-8 SA202-10	PF203	0.62
3/4	SAPF204-12	3-19/32	2-51/64	0.079	43/64	23/64	2-3/16	1.2205	0.295	1-1/4	5/16	SA204-12	PF204	0.82
7/8 15/16 1	SAPF205-14 SAPF205-15 SAPF205-16	3-3/4	3	0.079	51/64	23/64	2-3/8	1.2205	0.295	1-1/2	5/16	SA205-14 SA205-15 SA205-16	PF205	0.43
1-1/16 1-1/8 1-3/16 1-1/4	SAPF206-17 SAPF206-18 SAPF206-19 SAPF206-20	4-7/16	3-9/16	0.102	51/64	7/16	2-13/16	1.4055	0.354	1-3/4	3/8	SA206-17 SA206-18 SA206-19 SA206-20	PF206	1.43
1-1/4 1-5/16 1-3/8 1-7/16	SAPF207-20 SAPF207-21 SAPF207-22 SAPF207-23	4-13/16	3-15/16	0.102	51/64	7/16	3-3/16	1.5315	0.374	2-3/16	3/8	SA207-20 SA207-21 SA207-22 SA207-23	PF207	1.76

Note: To Specify relubricatable units add "G" suffix.

CALL 1-800-708-2128 TO ORDER.

PRESSED STEEL UNIT

SET SCREW TYPE: TRIANGULAR THREE BOLT FLANGE

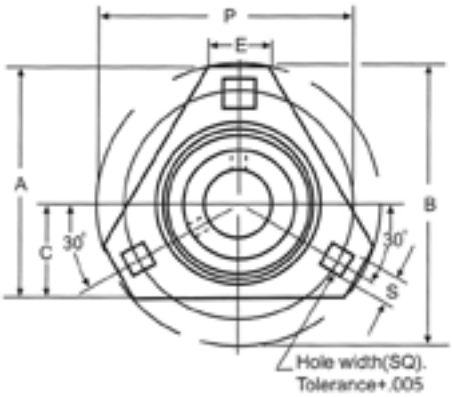

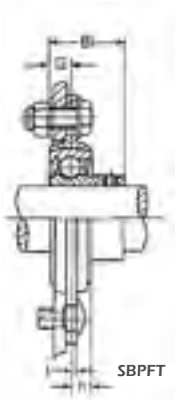

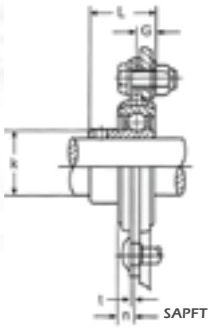

SBPFT200 Series

Shaft Dia. (in.)	RBI Unit No.	Dimensions (in.)										Bolt Used (in.)	Bearing No.	Housing No.	Weight (lbs.)
		A	B	C	S	E	P	G	t	Bi	n				
1/2 5/8	SBPFT201-8 SBPFT202-10	2-23/32	3-19/64	1-1/8	9/32	13/16	2-1/2	9/32	0.075	0.8661	0.236	1/4	SB201-8 SB202-10	PFT203	0.45
3/4	SBPFT204-12	3	3-9/16	1-5/16	11/32	1-1/16	2-13/16	5/16	0.083	0.9843	0.275	5/16	SB204-12	PFT204	0.60
7/8 15/16 1	SBPFT205-14 SBPFT205-15 SBPFT205-16	3-1/8	3-3/4	1-3/8	11/32	1-3/16	3	11/32	0.083	1.063	0.295	5/16	SB205-14 SB205-15 SB205-16	PFT205	0.69
1-1/16 1-1/8 1-3/16 1-1/4	SBPFT206-17 SBPFT206-18 SBPFT206-19 SBPFT206-20	3-11/16	4-7/16	1-1/2	13/32	1	3-9/16	11/32	0.104	1.1811	0.315	3/8	SB206-17 SB206-18 SB206-19 SB206-20	PFT206	1.05
1-1/4 1-5/16 1-3/8 1-7/16	SBPFT207-20 SBPFT207-21 SBPFT207-22 SBPFT207-23	4-5/32	4-63/64	1-3/4	13/32	1-17/64	3-15/16	3/8	0.104	1.2598	0.335	3/8	SB207-20 SB207-21 SB207-22 SB207-23	PFT207	1.29

ECCENTRIC LOCKING COLLAR TYPE: TRIANGULAR THREE BOLT FLANGE

SAPFT200 Series

Shaft Dia. (in.)	RBI Unit No.	Dimensions (in.)											Bolt Used (in.)	Bearing No.	Housing No.	Weight (lbs.)
		A	B	C	S	E	P	G	t	L	n	K				
1/2 5/8	SAPFT201-8 SAPFT202-10	2-23/32	3-19/64	1-1/8	9/32	13/16	2-1/2	9/32	0.075	1.126	0.256	1-1/8	1/4	SA201-8 SA202-10	PFT203	0.50
3/4	SAPFT204-12	3	3-9/16	1-5/16	11/32	1-1/16	2-13/16	5/16	0.083	1.2205	0.295	1-1/4	5/16	SA204-12	PFT204	0.69
7/8 15/16 1	SAPFT205-14 SAPFT205-15 SAPFT205-16	3-1/8	3-3/4	1-3/8	11/32	1-3/32	3	11/32	0.083	1.2205	0.295	1-1/2	5/16	SA205-14 SA205-15 SA205-16	PFT205	0.78
1-1/16 1-1/8 1-3/16 1-1/4	SAPFT206-17 SAPFT206-18 SAPFT206-19 SAPFT206-20	3-11/16	4-7/16	1-1/2	13/32	1	3-9/16	11/32	0.104	1.4055	0.354	1-3/4	3/8	SA206-17 SA206-18 SA206-19 SA206-20	PFT206	1.16
1-1/4 1-5/16 1-3/8 1-7/16	SAPFT207-20 SAPFT207-21 SAPFT207-22 SAPFT207-23	4-5/32	4-63/64	1-3/4	13/32	1-17/64	3-15/16	3/8	0.104	1.5315	0.374	2-3/16	3/8	SA207-20 SA207-21 SA207-22 SA207-23	PFT207	1.40

PRESSED STEEL UNIT

SET SCREW TYPE: PILLOW BLOCK

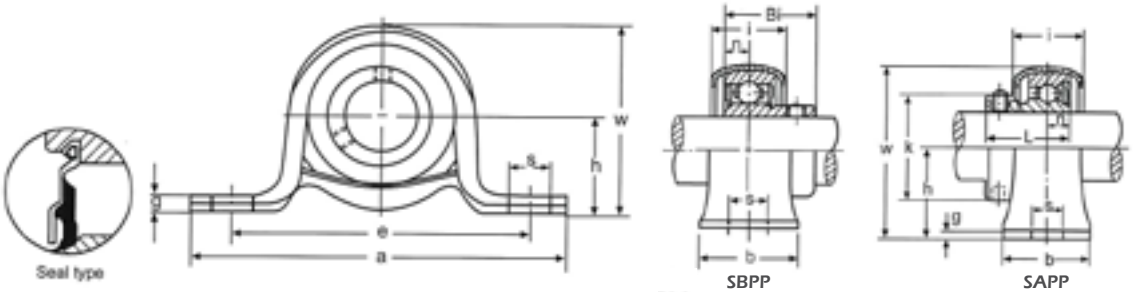

SBPP200 Series

Shaft Dia. (in.)	RBI Unit No.	Dimensions (in.)										Bolt Used (in.)	Bearing No.	Housing No.	Weight (lbs.)
		h	a	e	b	s	g	w	i	Bi	n				
1/2 5/8	SBPP201-8 SBPP202-10	7/8	3-3/8	2-11/16	1	23/64	3/32	1-23/32	3/4	0.8661	0.236	5/16	SB201-8 SB202-10	PP203	0.35
3/4	SBPP204-12	1	3-7/8	3.000	1-1/4	23/64	3/32	1-31/32	53/64	0.9843	0.275	5/16	SB204-12	PP204	0.51
7/8 15/16 1	SBPP205-14 SBPP205-15 SBPP205-16	1-1/8	4-1/4	3-3/8	1-1/4	7/16	1/8	2-7/32	1	1.063	0.295	3/8	SB205-14 SB205-15 SB205-16	PP205	0.66
1-1/16 1-1/8 1-3/16 1-1/4	SBPP206-17 SBPP206-18 SBPP206-19 SBPP206-20	1-5/16	4-5/8	3-3/4	1-1/2	7/16	5/32	2-19/32	1-1/32	1.1811	0.315	3/8	SB206-17 SB206-18 SB206-19 SB206-20	PP206	0.99
1-1/4 1-5/16 1-3/8 1-7/16	SBPP207-20 SBPP207-21 SBPP207-22 SBPP207-23	1-9/16	5-1/16	4-3/16	1-5/8	7/16	3/16	3-1/16	1-3/16	1.2598	0.335	3/8	SB207-20 SB207-21 SB207-22 SB207-23	PP207	1.43

ECCENTRIC LOCKING COLLAR TYPE: PILLOW BLOCK

SAPP200 Series

Shaft Dia. (in.)	RBI Unit No.	Dimensions (in.)											Bolt Used (in.)	Bearing No.	Housing No.	Weight (lbs.)
		h	a	e	b	s	g	w	i	L	n	K				
1/2 5/8	SAPP201-8 SAPP202-10	7/8	3-3/8	2-11/16	1	23/64	3/32	1-23/32	3/4	1.126	0.256	1-1/8	5/16	SA201-8 SA202-10	PP203	0.42
3/4	SAPP204-12	1	3-7/8	3	1-1/4	23/64	3/32	1-31/32	53/64	1.2205	0.295	1-1/4	5/16	SA204-12	PP204	0.60
7/8 15/16 1	SAPP205-14 SAPP205-15 SAPP205-16	1-1/8	4-1/4	3-3/8	1-1/4	7/16	1/8	2-7/32	1	1.2205	0.295	1-1/2	3/8	SA205-14 SA205-15 SA205-16	PP205	0.75
1-1/16 1-1/8 1-3/16 1-1/4	SAPP206-17 SAPP206-18 SAPP206-19 SAPP206-20	1-5/16	4-5/8	3-3/4	1-1/2	7/16	5/32	2-19/32	1-1/32	1.4055	0.354	1-3/4	3/8	SA206-17 SA206-18 SA206-19 SA206-20	PP206	1.10
1-1/4 1-5/16 1-3/8 1-7/16	SAPP207-20 SAPP207-21 SAPP207-22 SAPP207-23	1-9/16	5-1/8	4-3/16	1-5/8	7/16	3/16	3-1/16	1-3/16	1.5315	0.374	2-3/16	3/8	SA207-20 SA207-21 SA207-22 SA207-23	PP207	1.54

CALL 1-800-708-2128 TO ORDER.

RUBBER CARTRIDGE UNIT

SET SCREW TYPE

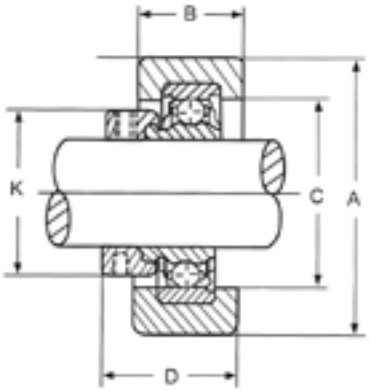

RCSM

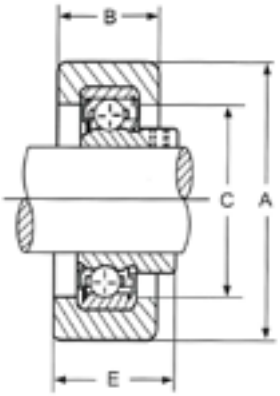

RCSMS

Seal type

RCSMS200 Series

Shaft Dia. (in.)	RBI Unit No. Set Screw Type	Dimensions (in.)				Bearing No.	Rubber Ring No.	Weight (lbs.)
		A	B	C	E			
1/2 5/8	RCSMS201-8 RCSMS202-10	2-17/32	1	1-3/8	1-9/64	CSB201-8 CSB202-10	RC-3	0.35
3/4	RCSMS204-12	2-17/32	1	1-9/16	1-7/32	CSB204-12	RC-4	0.48
7/8 15/16 1	RCSMS205-14 RCSMS205-15 RCSMS205-16	2-17/32	1	2-25/32	1-9/32	CSB205-14 CSB205-15 CSB205-16	RC-5	0.53

ECCENTRIC LOCKING COLLAR TYPE

RCSM200 L-Series

Shaft Dia. (in.)	RBI Unit No. Locking Collar Type	Dimensions (in.)					Bearing No.	Rubber Ring No.	Weight (lbs.)
		A	B	C	D	K			
1/2 5/8	RCSM201-8L RCSM202-10L	2-17/32	1	1-3/8	1-3/8	1-1/8	CSA201-9 CSA202-10	RC-3	0.44
3/4	RCSM204-12L	2-17/32	1	1-9/16	1-27/64	1-1/4	CSA204-12	RC-4	0.52
7/8 15/16 1	RCSM205-14L RCSM205-15L RCSM205-16L	2-17/32	1	2-25/32	1-27/64	1-1/2	CSA205-14 CSA205-15 CSA205-16	RC-5	0.58

INSERT BEARINGS

SET SCREW TYPE - LIGHT DUTY : SPHERICAL & CYLINDRICAL

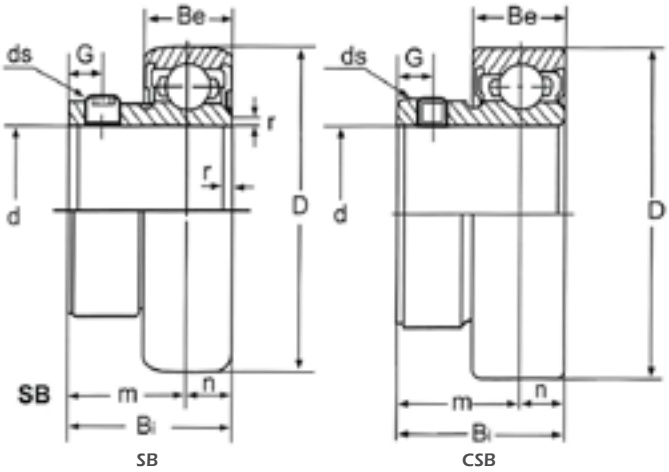

SB200 & CSB200 Series

Shaft Dia. (in.)	RBI Bearing No.		Dimensions (in.) (mm.)								Load Rating (lbs.)		Weight (lbs.)
d			D	Bi	Be	r	n	m	G	ds	Dynamic	Static	
1/2 5/8	SB201-8 SB202-10	CSB201-8 CSB202-10	1.5748 40	0.866 22	0.472 12	0.039 1	0.236 6	0.063 16	0.177 4.5	1/4-28	2750	1072	0.20 0.18
3/4	SB204-12	CSB204-12	1.8504 47	0.984 1	0.551 14	0.059 1.5	0.275 7	0.708 18	0.177 4.5	1/4-28	2880	1484	0.29
1	SB205-16	CSB205-16	1.8504 47	0.984 25	0.965 24.5	0.059 1.5	0.236 6	0.729 18.5	0.218 5.53	1/4-28	1744	1159	0.35
7/8 15/16 1	SB205-14 SB205-15 SB205-16	CSB205-14 CSB205-15 CSB205-16	2.047 52	1.062 27	0.591 15	0.059 1.5	0.295 7.5	0.767 19.5	0.217 5.5	1/4-28	3152	1765	0.40 0.37 0.35
1-1/16 1-1/8 1-3/16 1-1/4	SB206-17 SB206-18 SB206-19 SB206-20	CSB206-17 CSB206-18 CSB206-19 CSB206-20	2.441 62	1.181 30	0.630 16	0.059 1.5	0.315 8	0.866 22	0.217 5.5	1/4-28	4375	2542	0.62 0.57 0.55 0.53
1-1/4 1-5/16 1-3/8 1-7/16	SB207-20 SB207-21 SB207-22 SB207-23	CSB207-20 CSB207-21 CSB207-22 CSB207-23	2.835 72	1.259 32	0.669 17	0.079 2	0.335 8.5	0.925 23.5	0.256 6.5	5/16-24	5777	3459	0.95 0.90 0.84 0.82
1-1/2 1-9/16	SB208-24 SB208-25	CSB208-24 CSB208-25	3.150 80	1.338 34	0.708 18	0.079 2	0.354 9	0.984 25	0.276 7	5/16-24	5787	4042	1.32 1.28
1-5/8 1-11/16 1-3/4	SB209-26 SB209-27 SB209-28	CSB209-26 CSB209-27 CSB209-28	3.3465 85	1.621 41.2	0.748 19	0.079 2	0.402 10.2	1.219 31	0.322 8.2	5/16-24	7357	4598	1.8
1-7/8 1-15/16 2	SB210-30 SB210-31 SB210-32	CSB210-30 CSB210-31 CSB210-32	3.543 90	1.714 43.5	0.787 20	0.079 2	0.430 10.9	1.284 32.6	0.362 9.2	3/8-24	7895	5180	1.8
2 2-3/16	SB211-32 SB211-35	CSB211-32 CSB211-35	3.937 100	1.783 45.3	0.826 21	0.098 2.5	0.466 11.8	1.317 33.5	0.385 9.8	3/8-24	9757 9752	6552 6601	2.4
2-1/4 2-7/16	SB212-36 SB212-39	CSB212-36 CSB212-39	4.331 110	2.114 53.7	0.866 22	0.098 2.5	0.586 14.9	1.248 31.7	0.385 9.8	3/8-24	11789	8093	2.9

Note: *All RBI SB inserts have an oil hole.*

CALL 1-800-708-2128 TO ORDER.

INSERT BEARINGS

ECCENTRIC LOCKING COLLAR TYPE - LIGHT DUTY : SPHERICAL & CYLINDRICAL

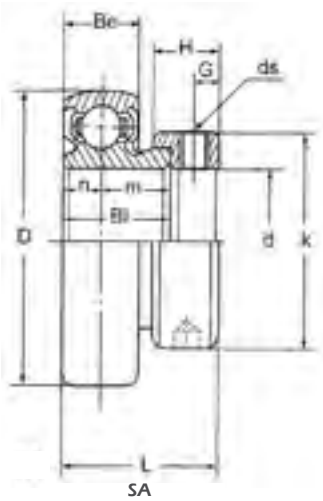

SA

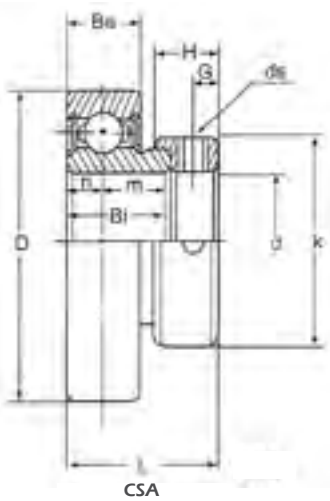

CSA

Seal type

SA200 & CSA200 Series

Shaft Dia. (in.)	RBI Bearing No.		Dimensions (in.) (mm.)									Set Screw ds	Load Rating (lbs.) (kg.)		Weight (lbs.)
			D	L	Bi	Be	n	m	k	H	G		Dynamic	Static	
1/2 5/8	SA201-8 SA202-10	CSA201-8 CSA202-10	1.5748 40	1.125 28.6	0.748 19	0.512 13	0.256 6.5	0.492 12.5	1.125 28.6	0.531 13.5	0.188 4.8	1/4-28	1650 750	1000 455	0.31 0.29
3/4	SA204-12	CSA204-12	1.8504 47	1.218 31	0.843 21.4	0.551 14	0.295 7.5	0.531 13.5	1.260 32	0.531 13.5	0.188 4.8	1/4-28	2230 1010	1390 630	0.33
7/8 15/16 1	SA204-14 SA205-15 SA205-16	CSA204-14 CSA205-15 CSA205-16	2.0472 52	1.218 31	0.843 21.4	0.591 15	0.295 7.5	0.531 13.5	1.500 38.1	0.531 13.5	0.188 4.8	1/4-28	2420 1100	1560 710	0.46 0.42 0.40
1-1/16 1-1/8 1-3/16 1-1/4	SA206-17 SA206-18 SA206-19 SA206-20	CSA206-17 CSA206-18 CSA206-19 CSA206-20	2.4409 62	1.406 35.7	0.937 23.8	0.629 16	0.354 9	0.583 14.8	1.748 44.4	0.625 15.875	0.236 6	5/16-24	3390 1540	2250 1020	0.77 0.73 0.68 0.64
1-1/4 1-5/16 1-3/8 1-7/16	SA207-20 SA207-21 SA207-22 SA207-23	CSA207-20 CSA207-21 CSA207-22 CSA207-23	2.8346 72	1.530 38.9	1.000 25.4	0.669 17	0.374 9.5	0.626 15.9	2.188 55.6	0.688 17.5	0.266 6.8	5/16-24	4470 2030	3090 1400	1.23 1.17 1.12 1.06
1-1/2 1-9/16	SA208-24 SA208-25	CSA208-24 CSA208-25	3.1496 80	1.719 43.7	1.187 30.1	0.708 18	0.433 11	0.756 19.2	2.377 60.3	0.719 18.3	0.266 6.8	5/16-24	5070 2300	3530 1600	1.50 1.43
1-5/8 1-11/16 1-3/4	SA209-26 SA209-27 SA209-28	CSA209-26 CSA209-27 CSA209-28	3.3465 85	1.719 43.7	1.187 30.1	0.748 19	0.433 11	0.756 19.2	2.499 63.5	0.719 18.3	0.266 6.8	5/16-24	5660 2570	3990 1810	1.68 1.61 1.52
1-7/8 1-15/16 2	SA210-30 SA210-31 SA210-32	CSA210-30 CSA210-31 CSA210-32	2.5433 90	1.719 43.7	1.187 30.1	0.787 20	0.433 11	0.756 19.2	2.751 69.8	0.719 18.3	0.266 6.8	5/16-24	6080 2760	4430 2010	1.83 1.74 1.74
2 2-1/8 2-3/16	SA211-32 SA211-34 SA211-35	CSA211-32 CSA211-34 CSA211-35	3.9370 100	1.906 48.4	1.280 32.5	0.945 24	0.472 12	0.807 20.5	2.999 76.2	0.813 20.5	0.313 8	3/8-24	7490 3400	5620 2550	2.12 1.92 1.79
2-1/4 2-7/16	SA212-36 SA212-39	CSA212-36 CSA212-39	4.3307 110	1.937 49.2	1.315 33.4	0.945 24	0.472 12	0.843 21.4	3.311 84.1	0.874 22.2	0.313 8	7/16-20	9040 4100	6940 3150	2.86 2.41

Note: All RBI inserts have an oil hole.

INSERT BEARINGS

SET SCREW TYPE - STANDARD DUTY: SPHERICAL

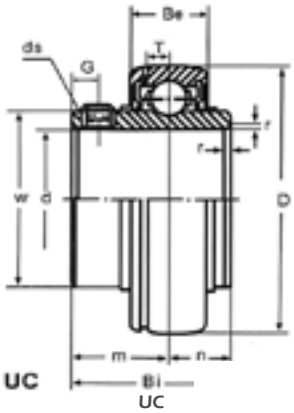

UC200 Series

Shaft Dia.		RBI Bearing No.	Dimensions (in.) (mm.)									Load Rating (lbs.) (kg.)		Weight (lbs.)
mm.	in.		D	Bi	Be	r	n	m	G	ds	w	Dynamic	Static	
12 15 17 20	1/2 5/8 3/4	UC201-8 UC202-10 UC204-12 UC201 UC202 UC203 UC204	1.8504 47	1.2205 31	0.629 16	0.039 1	0.500 12.7	0.7205 18.3	0.177 4.5	1/4-28	1.142	2230 1010	1390 630	0.44 0.42 0.35 0.46 0.42 0.40 0.35
25	7/8 15/16 1	UC205-14 UC205-15 UC205-16 UC205	2.0472 52	1.3386 34	0.669 17	0.059 1.5	0.563 14.3	0.7756 19.7	0.197 5	1/4-28	1.339	2420 1100	1560 710	0.49 0.44 0.42 0.42
30	1-1/16 1-1/8 1-3/16 1-1/4	UC206-17 UC206-18 UC206-19 UC206-20 UC206	2.4409 62	1.500 38.1	0.748 19	0.059 1.5	0.626 15.9	0.8740 22.2	0.197 5	1/4-28	1.591	3390 1540	2250 1020	0.79 0.75 0.71 0.66 0.66
35	1-1/4 1-5/16 1-3/8 1-7/16	UC207-20 UC207-21 UC207-22 UC207-23 UC207	2.8346 72	1.6890 42.9	0.787 20	0.079 2	0.689 17.5	1 25.4	0.236 6	5/16- 24	1.866	4470 2030	3090 1400	1.15 1.10 1.06 1.01 1.01
40	1-1/2 1-9/16	UC208-24 UC208-25 UC208	3.1496 80	1.937 49.2	0.827 21	0.079 2	0.748 19	1.1890 30.2	0.315 8	5/16- 24	2.075	5070 2300	3530 1600	1.50 1.41 1.39
45	1-5/8 1-11/16 1-3/4	UC209-26 UC209-27 UC209-28 UC209	3.3465 85	1.9370 49.2	0.866 22	0.079 2	0.748 19	1.1890 30.2	0.315 8	5/16- 24	2.248	5660 2570	3990 1810	1.72 1.63 1.54 1.50
50	1-7/8 1-15/16 2	UC210-30 UC210-31 UC210-32 UC210	3.5433 90	2.0315 51.6	0.9055 23	0.079 2	0.748 19	1.2835 32.6	0.354 9	3/8-24	2.465	6080 2760	4430 2010	1.87 1.76 1.76 1.72
55	2 2-1/8 2-3/16	UC211-32 UC211-34 UC211-35 UC211	3.9370 100	2.1890 55.6	0.944 24	0.098 2.5	0.874 22.2	1.3150 33.4	0.354 9	3/8-24	2.776	7490 3400	5620 2550	2.69 2.43 2.32 2.36
60	2-1/4 2-3/8 2-7/16	UC212-36 UC212-38 UC212-39 UC212	4.3307 110	2.5630 65.1	1.024 26	0.098 2.5	1 25.4	1.5630 39.7	0.394 10	3/8-24	3.059	9040 4100	6940 3150	3.64 3.29 3.13 3.33
65	2-1/2	UC213-40 UC213	4.7244 120	2.5630 65.1	1.063 27	0.098 2.5	1 25.4	1.5630 39.7	0.394 10	3/8-24	3.260	9920 4500	7720 3500	4.15 3.97
70	2-3/4	UC214-44 UC214	4.9213 125	2.9370 74.6	1.142 29	0.098 2.5	1.189 30.2	1.7480 44.4	0.472 12	7/16- 20	3.425	10800 4900	8380 3800	4.56 4.54

CALL 1-800-708-2128 TO ORDER.

INSERT BEARINGS

ECCENTRIC LOCKING COLLAR TYPE - STANDARD DUTY: SPHERICAL

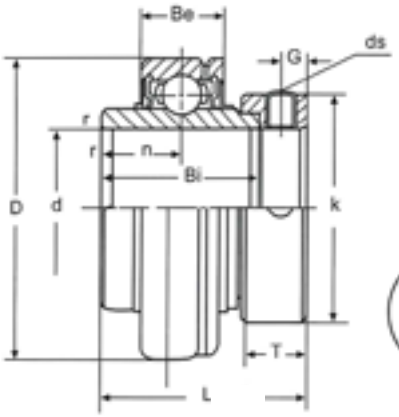

HC

HC200 Series

Shaft Dia.		RBI Bearing No.	Dimensions (in.) (mm.)									Set Screw ds	Load Rating (lbs.) (kg.)		Weight (lbs.)
mm.	in.		D	L	Bi	Be	r	n	k	T	G		Dynamic	Static	
20	3/4	HC204-12 HC204	1.850 47	1.720 43.7	1.342 34.1	0.629 16	0.059 1.5	0.637 17.1	1.260 32	0.531 13.5	0.188 4.8	1/4-28	2230 1010	1390 630	0.44 0.42
25	7/8 15/16 1	HC205-14 HC205-15 HC205-16 HC205	2.0472 52	1.748 44.4	1.374 34.9	0.669 17	0.059 1.5	0.688 17.5	1.500 38.1	0.531 13.5	0.188 4.8	1/4-28	2420 1100	1560 710	0.57 0.53 0.46 0.49
30	1-1/16 1-1/8 1-3/16 1-1/4	HC206-17 HC206-18 HC206-19 HC206-20 HC206	2.4409 62	1.905 48.4	1.437 36.5	0.748 19	0.059 1.5	0.720 18.3	1.748 44.4	0.625 15.9	0.234 6	1/4-28	3390 1540	2250 1020	0.93 0.88 0.82 0.77 0.82
35	1-1/4 1-5/16 1-3/8 1-7/16	HC207-20 HC207-21 HC207-22 HC207-23 HC207	2.8346 72	2.016 51.2	1.484 37.7	0.787 20	0.079 2	0.742 18.8	2.188 55.6	0.688 17.5	0.266 6.8	5/16-24	4470 2030	3090 1400	1.41 1.35 1.28 1.19 1.28
40	1-1/2 1-9/16	HC208-24 HC208-25 HC208	3.1496 80	2.220 56.4	1.689 42.9	0.862 21	0.079 2	0.844 21.4	2.377 60.3	0.719 18.3	0.266 6.8	5/16-24	5070 2300	3530 1600	1.79 1.70 1.68
45	1-5/8 1-11/16 1-3/4	HC209-26 HC209-27 HC209-28 HC209	3.3465 85	2.220 56.4	1.689 42.9	0.866 22	0.079 2	0.844 21.4	2.499 63.5	0.719 18.3	0.266 6.8	5/16-24	5660 2570	3990 1810	2.03 1.92 1.79 1.79
50	1-7/8 1-15/16 2	HC210-30 HC210-31 HC210-32 UC210	3.5433 90	2.468 62.7	1.937 49.2	0.866 22	0.079 2	0.969 24.6	2.751 69.8	0.719 18.3	0.266 6.8	3/8-24	6080 2760	4430 2010	2.34 2.21 2.21 2.14
55	2 2-1/8 2-3/16	UC211-32 UC211-34 UC211-35 HC211	3.9370 100	2.814 71.4	2.189 55.6	0.944 24	0.098 2.5	1.091 27.7	2.999 76.2	0.813 20.6	0.313 8	3/8-24	7490 3400	5620 2550	3.44 3.29 2.95 3.02
60	2-1/4 2-3/8 2-7/16	HC212-36 HC212-38 HC212-39 HC212	4.3307 110	3.062 77.8	2.437 61.9	1.023 27	0.098 2.5	1.219 31	3.312 84.1	0.875 22.2	0.313 8	3/8-24	9040 4100	6940 3150	4.48 4.10 3.90 4.12

INSERT BEARINGS

SET SCREW TYPE: SER SERIES BEARING

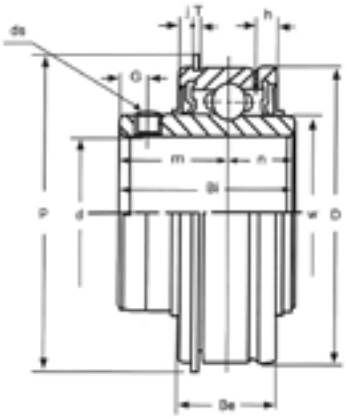

SER200 Series

Shaft Dia. (in.)	RBI Bearing No.	Dimensions (in.)												Load Rating (lbs.) (kg.)		Weight (lbs.)
		D	Bi	Be	n	m	G	T	h	j	p	ds	w	Dynamic	Static	
1/2 5/8 3/4	SER201-8 SER202-10 SER204-12	1.8504 47	1.219	0.625	0.406	0.813	0.177	0.042	0.150	0.094	2.067	1/4-28	1.142	2230 1010	1390 630	0.57 0.53 0.49
7/8 15/16 1	SER205-14 SER205-15 SER205-16	2.0472 52	1.375	0.750	0.515	0.86	0.197	0.042	0.203	0.094	2.272	1/4-28	1.339	2420 1100	1560 710	0.68 0.66 0.62
1-1/16 1-1/8 1-3/16 1-1/4	SER206-17 SER206-18 SER206-19 SER206-20	2.4409 62	1.500	0.875	0.625	0.875	0.197	0.065	0.219	0.125	2.658	1/4-28	1.591	3390 1540	2250 1020	0.93 0.88 0.84 0.79
1-1/4 1-5/16 1-3/8 1-7/16	SER207-20 SER207-21 SER207-22 SER207-23	2.8346 72	1.688	0.937	0.688	1.000	0.236	0.065	0.219	0.125	3.078	5/16-24	1.866	4470 2030	3090 1400	1.37 1.30 1.23 1.17
1-1/2 1-9/16	SER208-24 SER208-25	3.1496 80	1.937	1.093	0.750	1.187	0.315	0.065	0.250	0.125	3.406	5/16-24	2.075	5070 2300	3530 1600	2.01 1.94
1-5/8 1-11/16 1-3/4	SER209-26 SER209-27 SER209-28	3.3465 85	1.937	1.093	0.750	1.187	0.315	0.065	0.250	0.125	3.594	5/16-24	2.248	5660 2570	3990 1810	2.32 2.21 2.14
1-7/8 1-15/16	SER210-30 SER210-31	3.5433 90	2.032	1.125	0.750	1.282	0.354	0.095	0.297	0.125	3.781	3/8-24	2.465	6080 2760	4430 2010	2.43 2.32
2 2-1/8 2-3/16	SER211-32 SER211-34 SER211-35	3.9370 100	2.189	1.187	0.875	1.314	0.354	0.095	0.297	0.125	4.187	3/8-24	2.776	7490 3400	5620 2550	3.00 2.76 2.62
2-1/4 2-3/8 2-7/16	SER212-36 SER212-38 SER212-39	4.3307 110	2.563	1.250	1.000	1.563	0.394	0.095	0.297	0.125	4.583	3/8-24	3.059	9040 4100	6940 3150	4.01 3.68 3.51

Note: Metric bore sizes available upon request.

CALL 1-800-708-2128 TO ORDER.

ENGINEERING DATA

BEARING LUBRICATION

Product	Company	Base Oil	Thickener	Min Temp [°F]	Max Temp [°F]	Dropping Pt. [°F]	cSt at 40°C	cSt at 100°C	Color
Alvania RL2	Shell	Petroleum	Lithium	-29	275	385	98.0	9.40	Amber
Beacon 325	Exxon	Diester	Lithium	-58	248	356	11.8	3.25	Tan
DC44	Dow Corning	Silicone	Lithium	-40	400	400	88.0	22.00	Brown/Amber
Dolium BRB	Shell	Mineral	Polyurea	-40	302	500	129.0	12.90	Purple
Mobil 28	Mobil	PAO	Bentonite	-80	351	500	40.0	28.00	Red
Mobil Polyrex EM2	Mobil	Mineral	Polyurea	-20	350	550	115.0	12.20	Blue
Multemp SRL	Kyodo Yushi	Ester	Lithium	-40	302	375	37.8	28.60	White
SRI-2	Chevron	Mineral	Polyurea	-22	350	470	116.0	12.30	Dark Green

RADIAL INTERNAL CLEARANCE FOR BEARING INSERTS

Bore Diameter		Normal (µm)		Normal (0.0001")		Loose (µm)		Loose (0.0001")	
mm.	in.	min.	max.	min.	max.	min.	max.	min.	max.
12.7000 14.2875 15.8750 17.4625	1/2 9/16 5/8 11/16	10	25	4	10	18	33	7.000	13
19.0500	3/4	12	28	5	11	20	36	8.000	14
20.6385 22.2250 23.8125 25.4000	13/16 7/8 15/16 1	12	28	5	11	23	41	9	16
26.9875 28.5750 30.1625 31.7500	1-1/16 1-1/8 1-3/16 1-1/4								
33.3375 34.9250 36.5125	1-5/16 1-3/8 1-7/16	13	33	5	13	28	46	11	18
38.1000 39.6875	1-1/2 1-9/16								
41.2750 42.8625 44.4500	1-5/8 1-11/16 1-3/4	14	36	6	14	30	51	12	20
46.0375 47.6250 49.2125 50.8000	1-13/16 1-7/8 1-15/16 2								
52.3875 53.9750 55.5625	2-1/16 2-1/8 2-3/16	18	43	7	17	38	61	15	24
57.1500 58.7375 60.3250 61.9125	2-1/4 2-5/16 2-3/8 2-7/16								
63.5000 68.2625	2-1/2 2-11/16	20	51	8	20	46	71	18	28
66.6750 69.8500	2-5/8 2-3/4								
71.4375 73.0250 74.6125	2-13/16 2-7/8 2-15/16								

SET SCREW TORQUE

Tightening Torque						
Size	N-m	lbf-in		Size	N-m	lbf-in
1/4-28	8.8	77.9		M12X1.5	48.4	428
M6X0.75	8.8	77.9		3/8-24	30.8	273
5/16-24	17.6	156		M10X1.25	30.8	273
M8X 1	17.6	156		7/16-20	48.4	428

BEARING TOLERANCES

BORE DIAMETER					
Over	Incl.	Tol (-0)	Over	Incl.	Tol (-0)
mm.		lµm	in.		0.0001"
10	18	+18	0.3937	0.7087	+7
18	30	+21	0.7087	1.1811	+8
30	50	+25	1.1811	1.9685	+10
50	80	+30	1.9685	3.1496	+12
80	120	+35	3.1496	4.7244	+14
120	180	+40	4.7244	7.0866	+16

OUTSIDE DIAMETER					
Over	Incl.	Tol (-0)	Over	Incl.	Tol (-0)
mm.		lµm	in.		0.0001"
30	50	-11	1.1811	1.9685	-4
50	80	-13	1.9685	3.1496	-5
80	120	-15	3.1496	4.7244	-6
120	150	-18	4.7244	5.9055	-7
150	180	-25	5.9055	7.0866	-10
180	250	-30	7.0866	9.8425	-12
250	315	-35	9.8425	12.4016	-14

INNER/OUTER RING WIDTH					
Over	Incl.	Tol (-0)	Over	Incl.	Tol (-0)
mm.		lµm	in.		0.0001"
2.5	10	-120	0.0984	0.3937	-47
10	18	-120	0.3937	0.7087	-47
18	30	-120	0.7087	1.1811	-47
30	50	-120	1.1811	1.9685	-47
50	80	-150	1.9685	3.1496	-59
80	120	-200	3.1496	4.7244	-79
120	150	-250	4.7244	5.9055	-98
150	180	-250	5.9055	7.0866	-98

ENGINEERING DATA

INTERCHANGE

Rbtech Part Number	AMI	Browning	Fafnir/ Torrington	HUB City	IPTCI	NTN	PEER	Sealmaster
CSA205-16	KHR205-16	-	RA100RR	-	CSA205-16	AELS205-100	FHR205-16	SL-16E
CSB205-16	BR5-16	-	YA100RR	-	CSB205-16	ASS205-100	FHSR205-16	SL-16
HC205-16	UG205-16	VE-216	G1100KRRB	YW220 X 1	NA205-16	UEL205-100D1	HC205-16	R-16E
HCAK205-16	UGAK205-16	VPLE-216	RAK1	PB220W X 1	NAPL205-16	UELPL205-100T	HCLP205-16	RPL-16
HCFS205-16	UGSLF205-16	VF4E-216	RCJ1	-	NANF205-16	UELFU205-100T	HCFS205-16	RF-16E
HCP205-16	UGP205-16	VPE-216	RAS1	PB221W X1	NAP205-16	UELP205-100T	HCP205-16	RP-16E
RCSM205-16L	-	RUBRE 116	RCSM1	-	-	-	RCSM-16L	SRC-16
RCSMS205-16	-	-	-	-	-	-	-	-
SA205-16	KH205-16	VE-116	RA100RRB	B200 X 1	SA205-16	AEL205-100	FH205-16	V-16E
SB205-16	B5-16	VS-116	YA100RRB	B100 X 1	SB205-16	AS205-100	FHS205-16	L-16
SER205-16	SER205-16	VER-216	ER-16	-	ER205-16	UCS205-100D1NR	SER-16	ER16
UC205-16	UC205-16	VS-216	GY1100KRRB	YW250 X 1	UC205-16	UC205-100D1	UC205-16	2 1
UCAK205-16	UCLP205-16	VPLS-216	YAK1	PB250W X 1	UCPL205-16	UCPL205-100T	UCLP205-16	NPL-16
UCF205-16	UCF205-16	VF4S-216	YCJ1	FB250 X 1	UCF205-16	UCF205-100T	UCF205-16	SF-16
UCFB205-16	UCFB205-16	-	-	-	UCFB205-16	UCFH205-100T	UCFB205-16	FB-16
UCFL205-16	UCFL205-16	-	-	-	-	UCFL205-100	-	-
UCFT205-16	UCFT205-16	VF2S-216	YCJT1	FB260 X 1	UCFL205-16	-	UCFT205-16	SFT-16
UCP205-16	UCP205-16	VPS-216	YAS1	PB251W X 1	UCP205-16	UCP205-100T	UCP205-16	NP-16
UCST205-16	UCST205-16	VTWS-216	YTU1	WSTU250 X 1	UCT205-16	-	UCT205-16	ST-16
UCTB205-16	UCTB205-16	VTBS-216	STB1	TPB250 X 1	UCPA205-16	UCUP205-100	UCPA205-16	TB-16
SBP205-16	BP5-16	VPS-116	SAS 1	PB251 X 1	SBP205-16G	-	FHSP205-16G	VP-16
SBAK205-16	BLP5-16	VPLS-116	SAK 1	PB250 X 1	SBPL205-16G	-	FHSLP205-16	VPL-16
SAP205-16	KHP205-16	VPE-116	VAS 1	PB221 X 1	SAP205-16G	-	FHP205-16	VP-16E
SAAK205-16	-	-	-	-	SAPL205-16G	UCPL205-100	FHLP205-16	-
SBLLP205-16	BLLP5-16	-	-	PB100 X 1	SBLP205-16G	-	FHSPWC205-16	-
SALLP205-16	KHLLP205-16	-	-	-	SALP205-16	-	FHPWC205-16	-
HCFJT205-16	UGFT205-16	VF2E-216	RCJT 1	-	NANFL205-16	UELFLU205-100	HCFTS205-16	RFT-16E
SBLF205-16	BLFL5-16	-	-	-	SBLF205-16G	-	FHSLF205-16	-
SALF205-16	KHLFL205-16	-	-	-	SALF205-16G	-	FHLF205-16	-
SBFCT205-16	BTM5-16	VF3S-116	GSFD 1	FB150 X 1	SBFRB205-126G	-	FHSF3X205-16	LF-16
SAFCT205-16	KHTM205-16	VF3E-116	GVFD 1	-	SARFB205-16G	-	FHF3X205-16	LF-16E
UCFS205-16	UCFS205-16		YCJ 1	-	UCNF205-16	-	-	-
SBFTD205-16	BFX205-16	VF2S-116M	GSFTD 1	FB110-1	SBLF205-16GH4	-	FHSFX205-16	LFT-16
SAFTD205-16	KHFX205-16	VF2E-116M	GVFTD 1	-	SALF205-16GH4	-	FHFX205-16	LFT-16E
HCST205-16	UGST205-16	VTWE-216	RTU 1	WSTU220-1	NAT205-16	-	HCT205-16	RT-16E
SBPFL205-16	BPFL5-16	-	-	FB110S-1	SBPFL205-16	ASPFL205-100	FHSPFLR205-16	SSFT-16
SAPFL205-16	KHPFL205-16	-	RAT 1	-	SAPFL205-16	AELPFL205-100	FHPFLR205-16	SSFT-16E
SBPF205-16	BPF5-16	-	-	FB100S-1	SBPF205-16	ASPF205-100	FHSPFR205-16	SSF-16
SAPF205-16	KHPF205-16	-	RA 1	-	SAPF205-16	AELPF205-100	FHPFR205-16	SSF-16E
SBPFT205-16	BPFT5-16	-	-	-	SBPFT205-16	-	-	TSSF-16
SAPFT205-16	KHPFT205-16	-	RATR 1	-	SAPFT205-16	-	FHPFTZ205-16	TSSF-16E
SBPP205-16	BPP5-16	-	-	PB100S-1	SBPP205-16	ASPP205-16	FHSPPZ205-16	SSP-16
SER205-16	SER205-16	MER-16	ER 16	ER-16	ER205-16	UCS205-100D1NR	SER-16	ER-16

CALL 1-800-708-2128 TO ORDER.

ENGINEERING DATA

METRIC CONVERSIONS

Inches		Millimeters	Inches		Millimeters	Inches		Millimeters
Fractions	Decimals		Fractions	Decimals		Fractions	Decimals	
	.00394	.1		.28125	7.1438	21/32	.65625	16.6688
	.00787	.2	19/64	.296875	7.5406		.66929	17.00
	.01181	.3	5/16	.3125	7.9375	43/64	.671875	17.0657
1/64	.015625	.3969		.31496	8.00	11/16	.6875	17.4625
	.01575	.4	21/64	.328125	8.3344	45/64	.703125	17.8594
	.01969	.5	11/32	.34375	8.7313		.70866	18.00
	.02362	.6		.35433	9.00	23/32	.71875	18.2563
	.02756	.7	23/64	.359375	9.1281	47/64	.734375	18.6532
1/32	.03125	.7938	3/8	.375	9.525		.74803	19.00
	.0315	.8	25/64	.390625	9.9219	3/4	.7500	19.05
	.03543	.9		.3937	10.00	49/64	.765625	19.4469
	.03937	1.00	13/32	.40625	10.3188	25/32	.78125	19.8438
3/64	.046875	1.1906	27/64	.421875	10.7156		.7874	20.00
1/16	.0625	1.5875		.4331	11.00	51/64	.796875	20.2407
5/64	.078125	1.9844	7/16	.4375	11.1125	13/16	.8125	20.6375
	.04874	2.00	29/64	.453125	11.5094		.82677	21.00
3/32	.09375	2.3813	15/32	.46875	11.9063	53/64	.828125	21.0344
7/64	.109375	2.7781		.47244	12.00	27/32	.84375	21.4313
	.11811	3.00	31/64	.484375	12.3031	55/64	.859375	21.8282
1/8	.125	3.175	1/2	.5000	12.70		.86614	22.00
9/64	.140625	3.5719		.51181	13.00	7/8	.875	22.225
5/32	.15625	3.9688	33/64	.515625	13.0969	57/64	.890625	22.6219
	.15748	4.00	17/32	.53125	13.4938		.90551	23.00
11/64	.171875	4.3656	35/64	.546875	13.8907	29/32	.90625	23.0188
	.1875	4.7625		.55118	14.00	59/64	.921875	23.4157
3/16	.19685	5.00	9/16	.5625	14.2875	15/16	.9375	23.8125
13/64	.203125	5.1594	37/64	.578125	14.6844		.94488	24.00
7/32	.21875	5.5563		.59055	15.00	61/64	.953125	24.2094
15/64	.234375	5.9531	19/32	.59375	15.0813	31/32	.96875	24.6063
	.23622	6.00	39/64	.609375	15.4782		.98425	25.00
1/4	.2500	6.35	5/8	.625	15.875	63/64	.984375	25.0032
17/64	.265625	6.7469		.62992	16.00		1.0000	25.4001
	.27559	7.00	41/64	.640625	16.2719			

RBI BEARING

Bearings + Technology + Solutions

MOUNTED UNITS & INSERTS

www.rbibearing.com + 1-800-708-2128

101 S. Gary Ave. Ste. B., Roselle, IL, 60172